Patriot
Service Guide

Model GR575

This Service Guide contains:
Troubleshooting
Replacement Instructions
Illustrated Parts Breakdown

Table of Contents

Nomenclature and Contact Information……..3

ABOUT THIS SERVICE GUIDE.....4
GR575 Components.....4-7

S-Drive Wiring Diagram.....……...8
S-Drive tiller Interface Socket Details (Connector CN7).....8
Patriot Wiring Diagram.....9

SCENARIO 1: Turn the Key to the On Position and No Power.....10
SCENARIO 2: Batteries will not Charge.....….....11

BEEP CODES.....12-14
BEEP CODE #2 - Low Battery Voltage.....12
BEEP CODE #3 - High Battery Voltage.....12
BEEP CODE #5 - Solenoid Brake Trip.....12-13
BEEP CODE #6 - Throttle Trip (out of neutral).....13
BEEP CODE #7 - Throttle Trip / Speed Control Fault (voltage error).....13
BEEP CODE #8 - Motor Disconnected.....14
BEEP CODE #9 - Possible Controller Fault.....14

COMPONENT REPLACEMENT INSTRUCTIONS.....15-23
Controller.....15
Drive Wheel.....16
Dash.....16
Key Switch, High/Low Switch, and Motor Brushes.....17
Motor/Brake Assembly.....18-19
Transaxle.....18-19
Batteries.....……....20
Shrouds.....21-23

APPENDIX A – HOW TO USE A VOLTMETER……..24
APPENDIX B - HOW TO USE AN OHM METER……25

APPENDIX C - WIRING DIAGRAMS.....26-28

ILLUSTRATED PARTS BREAKDOWN.....29-48

DASHBOARD AND HAND BRAKE.....49
WIRING DIAGRAM.....50

PATRIOT NOMENCLATURE

1 – Seat Assembly
2 – Dash
3 – Tiller
4 – Front Basket
5 – Headlights
6 – Front Bumper
7 – Front Wheel
8 – Circuit Breaker
9 – Rubber Floor Mat
10 – Side Rail
11 – Drive Wheel
12 – Rear Bumper
13 – Freewheel Lever
14 – Battery Cover
15 – Arm Assembly
16 – Hand Brake
17 – Tiller Adjustment Lever

Figure 1. Patriot (Model GR575)

Contact Information
Golden Technologies
401 Bridge Street
Old Forge, PA 18518

Toll-free: 800-624-6374
Fax: 800-628-5165

Email: parts@goldentech.com

ABOUT THIS SERVICE GUIDE

This service guide provides you with the information necessary to repair the Golden Technologies Patriot scooter. There are two parts to the service guide: Troubleshooting and Component Replacement. The Troubleshooting section will assist you in finding the source of the problem. The Component Replacement section contains step-by-step replacement instructions for key components.

Before troubleshooting, check the following:
• ***Make sure that the circuit breaker is reset.***
• Visually check terminals for corrosion. Check wires for missing insulation.
• ***Make sure that the batteries are in good working order.*** When possible, keep sets of known good batteries of various ratings in your shop at all times. The GR575 requires 75AH batteries. Problems that surface during troubleshooting are often due to the fact that the batteries are not fully charged or cannot hold their charge.
• ***Make sure that the electrical connections are secure.*** Unplug the connectors and make sure all of the pins are seated properly. Push the pins back into the connector housing if necessary.

NOTICE **If you get to a point during troubleshooting where you cannot continue, call tech support at 800-624-6374.**

GR575 COMPONENTS

The GR575 is a battery-operated scooter controlled by a P+G Drives S-Drive controller. The S-Drive controller monitors the systems and displays BEEP codes when it detects a fault in the system. The GR575 was designed to operate with between 18 – 24 volts (V) of direct current (DC).

The GR575 control system is made up of the following components:

• 12V/75AH Batteries (2)
• Battery Harness(es) (2)
• Main Circuit Breaker
• Off-Board Battery Charger
• Power Harness
• Motor Brake
• P+G S-Drive Controller
• Main Harness
• Dash
• Paddle (Throttle pot)
• Speed Pot
• Key Switch
• High/Low Switch

NOTICE **Parts and service must be authorized by Golden Technologies Service Department. Unauthorized parts or service may void the warranty. For more information, contact the Golden Technologies Service Department at 800-624-6374 or parts@goldentech.com.**

Component: 12VDC/75AH Batteries (2)
Location: Connected in series inside the battery compartment.
Function: Supply 24VDC to the motor and/or accessories (12VDC x 2).
Connections: BAT+ and BAT- are located on each battery.
Failure Signs: Batteries drain quickly. Scooter runs slowly or not at all. Batteries will not charge, but charger is working properly. Beep Codes #2 and #3.
Tests: Load test. Fully charge the batteries first. Make sure the charging system is working.
Expected Readings: 12 - 14VDC each when fully charged. 24VDC across the B+ and B- terminals of opposite batteries. **Serviceable:** Replace battery.

Component: Battery Harness(es) (2)
Location: Connected to each of the batteries.
Function: Supply 24VDC from the batteries to the S-Drive controller. (12VDC each battery x 2).
Connections: BAT+ and BAT- are located on each battery.

Failure Signs: Scooter will not operate or stops operating abruptly. Batteries will not charge, but charger is working properly. Beep Codes #2 and #3.
Tests: Check for corrosion and/or loose hardware. Check for 12VDC out of each battery harness. Check battery harness(es) connections for continuity.
Expected Readings: 12 - 14VDC each when fully charged. 0 ohms resistance across each battery cable.
Serviceable: Replace harness(es) if necessary.

Component: Circuit Breaker
Location: Mounted on the front of the battery compartment.
Function: Protects battery circuit from current overload. When the current draw exceeds breaker rating, the circuit breaker will open.
Connections: Two terminals on the circuit breaker connect the circuit breaker to the batteries.
Failure Signs: Opens repeatedly. May indicate a failed circuit breaker or short in the wiring. Also, may open if the motors are overloaded (from excessive weight, excessive uphill driving, etc).
Test: Measure resistance across circuit breaker. Check for continuity across wires between circuit breaker and batteries.
Expected reading: Less than 10 ohms.
Serviceable: ***Circuit breaker must be replaced with exact current rating.*** Replace wires as necessary.

Component: Battery Charger (Model: HP1202B, off-board charger only).
Location: Off-Board
Function: Recharges batteries. There is one LED on the charger. The LED is red when the charger is plugged into an electrical outlet. If the LED does not go on, then check the electrical outlet. When the charger is on and plugged into the charger port, an orange LED indicates that the batteries are charging. A green LED indicates that the batteries are fully charged.
Connections: Charging Port and AC wall outlet.
Failure Signs: LED does not go on. Batteries will not charge.
Tests: Test for voltage. Test by measuring DC output of the charger.
Expected reading: 24.5VDC - 27VDC
Serviceable: Replace if necessary.

Component: Charging Harness
Location: Inside the rear tiller shroud.
Function: Provides external charger with connection to the batteries.
Connections: Charger port
Failure Signs: Batteries will not charge.
Tests: Test for voltage across the two outside pins of the charging port. Test harness for continuity.
Expected readings: Total battery voltage.
Serviceable: Replace as necessary.

Component: Power Harness
Location: Mounted inside the battery compartment.
Connections: Batteries, Circuit Breaker, and Controller
Function: Provides voltage to the controller.
Failure Signs: Scooter will not run.
Tests: Test for continuity.
Expected readings: Not open.
Serviceable: Replace as necessary.

Component: Motor
Location: Rear section of scooter on transaxle.
Function: Drives the scooter.
Connections: Controller
Failure Signs: Scooter runs slowly or not at all.
Tests: Test for internal resistance in motor. Test motor wires for continuity. See Beep Code #8.
Expected readings: Internal resistance is less than 50 ohms but not shorted. (Note: Can be as low as 0.2 ohms).
Serviceable: Replace motor brake.

Component: Motor Brake
Location: End of motor.
Function: Parking brake for the motor.
Connections: Controller
Failure Signs: Scooter will not move or moves sluggishly. No audible click when the scooter stops.
Tests: Test for open. See Beep Code #5.
Expected readings: Less than 80 ohms but not shorted.
Serviceable: Replace motor brake.

Component: Controller
Location: Mounted inside the battery compartment.
Function: Monitors the system and beeps when something in the system is out of range. These faults are heard as a fast series of Beeps, followed by a Beep Code (BEEP CODES 2, 3, and 5-9).
Connections: Batteries, Motor, Motor Brake, Charging Port, and Main Harness.
Failure Signs: Beep Code #9.
Tests: Test for voltage to motor when paddle is pressed.
Expected readings: Voltage varies.
Serviceable: Replace as necessary.

Component: Main Harness
Location: Front and rear sections of the scooter.
Function: Connects controller to the dashboard.
Connections: Dashboard, Hand Brake, Key Switch, Charging Port, High/Low Switch, and Controller.
Failure Signs: Scooter does not run or runs slowly.
Tests: Test for voltage at (batteries and key switch), resistance at (speed pot and throttle pot), and continuity.
Expected readings: 24VDC (batteries and key switch), resistance (speed and throttle pot) varies, and continuity not open.
Serviceable: Replace as necessary.

Component: Paddle Assembly (throttle Pot)
Location: Underside of the dash.
Function: The throttle pot uses variable resistance to control speed and direction of travel by reversing polarity.
Connections: Dashboard
Failure Signs: Beep Codes #6 and #7
Tests: Test resistance with the paddle deflected either way.
Expected readings: Depends on direction of deflection.
Serviceable: Replace dash.

Component: Speed Pot
Location: Dash
Function: The speed potentiometer (pot) uses variable resistance to control the top speed of the scooter.
Connections: Dashboard and Main Harness
Failure Signs: Speed will not vary when knob is turned.
Tests: See Beep Code #7
Expected readings: Depends on speed pot position.
Serviceable: Replace the dash.

Component: Dash
Location: Mounted on top of the tiller
Function: Provides connectivity between controller and key switch, battery meter, throttle pot, and speed pot.
Connections: Main Harness, Lighting Harness(es), and Throttle Pot.
Failure Signs: Damaged or loose connectors. Pins not seated properly in connectors.
Serviceable: Replace as necessary.

Component: High/Low Switch
Location: Mounted on the rear tiller
Function: Provides connectivity to the controller.
Connections: Main Harness
Failure Signs: Scooter speed does not increase/decrease when the switch is operated.
Serviceable: Replace as necessary.

TYPICAL S-DRIVE WIRING DIAGRAM

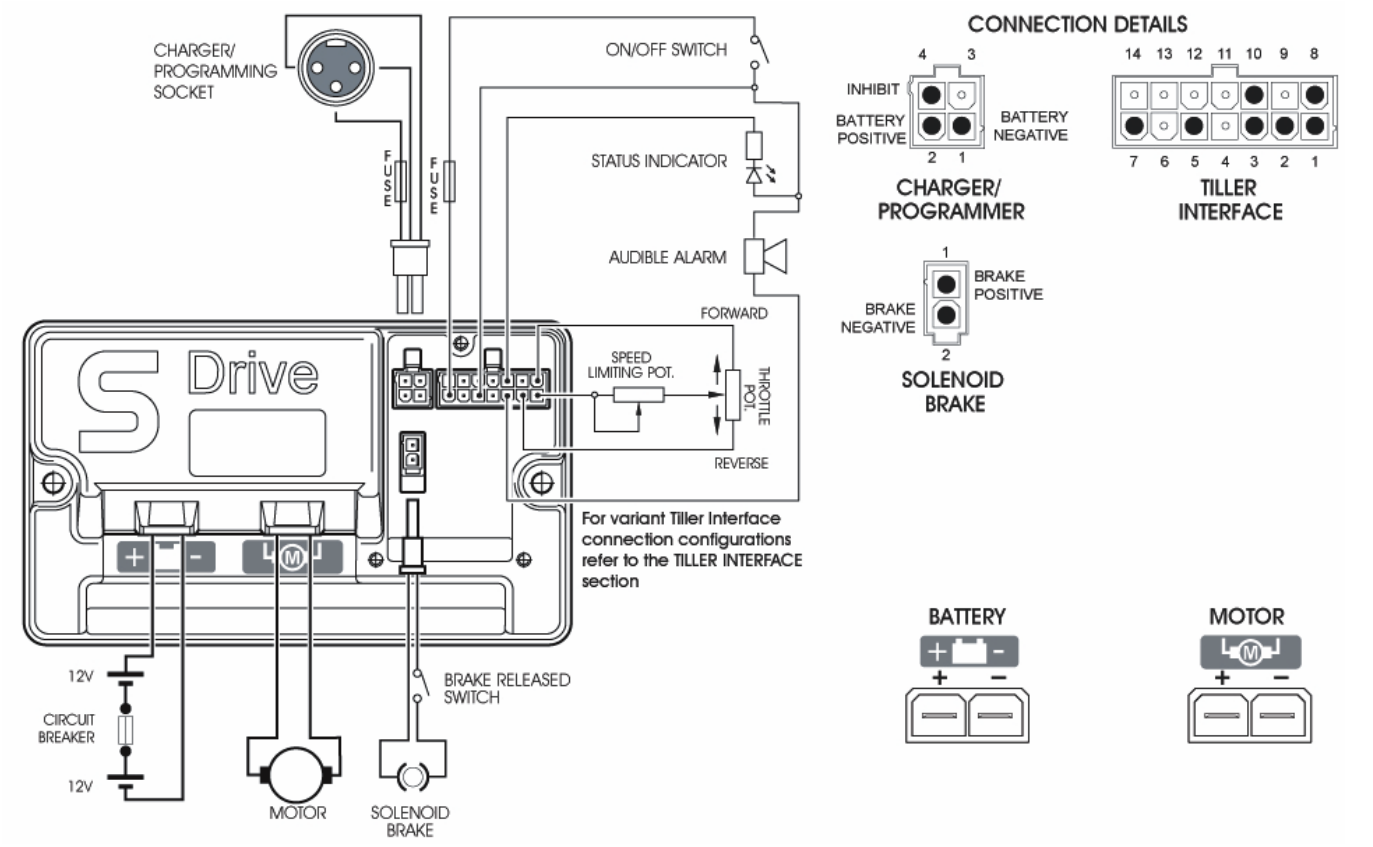

S-DRIVE TILLER INTERFACE SOCKET DETAILS

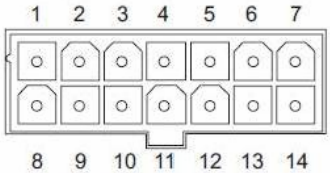

PIN NUMBER	DESCRIPTION	WIRE COLOR
1	Throttle Wiper	Yellow
2	Throttle High Reference	Orange
3	Audible Alarm	Purple
4	Slow/Fast Switch	Yellow
5	On/Off Switch	White
6	Inhibit 2	N/A
7	24V	Red
8	Throttle Low Reference	Blue
9	Speed Limiting Potentiometer	Gray
10	Status Indicator	Green
11	Spare	N/A
12	Reverse Switch	N/A
13	0V	Black
14	Inhibit 3	N/A

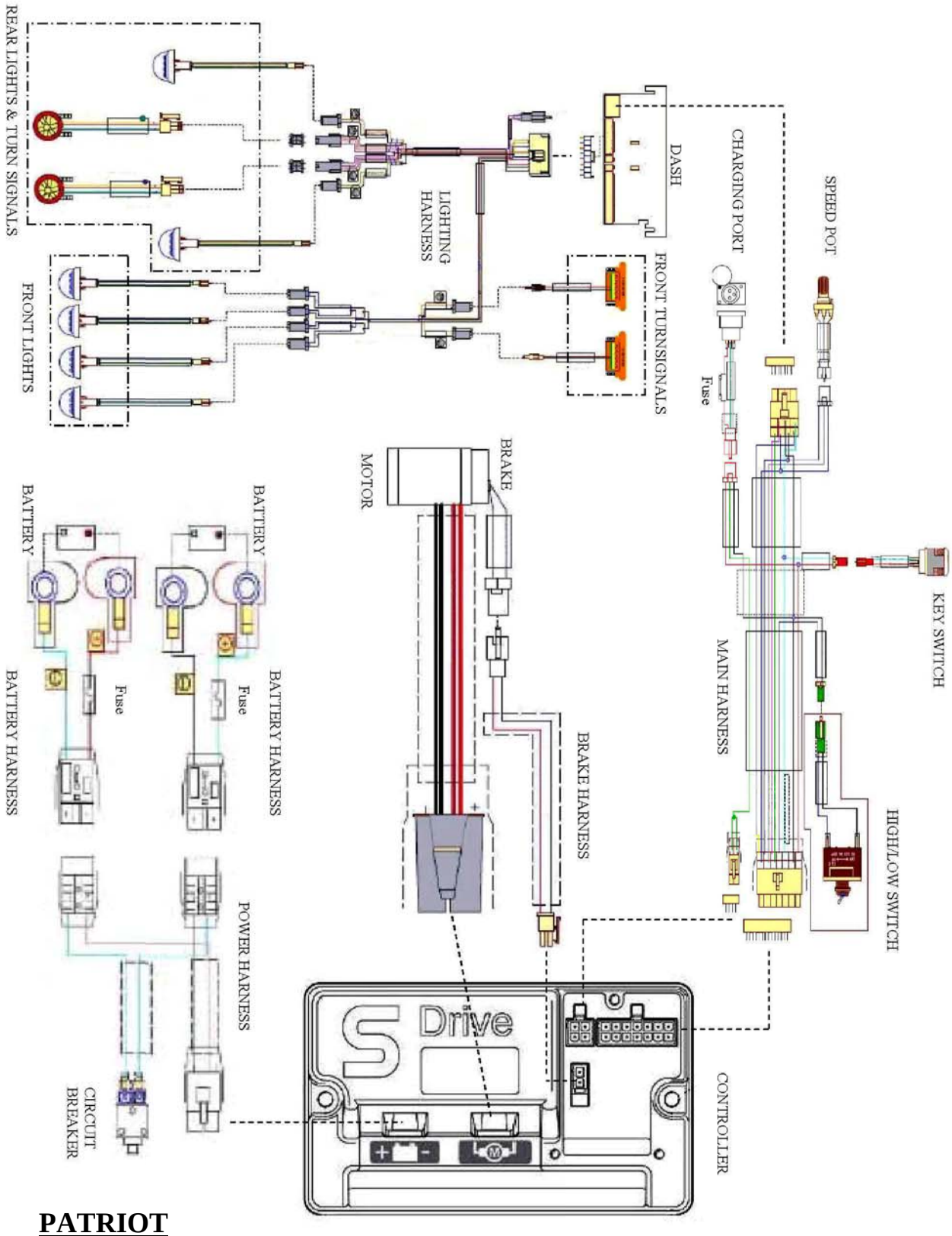

PATRIOT
WIRING DIAGRAM

Scenario 1: Turn the Key to the On Position and No Power

Put the key into the key switch and turn to the on position. There is no power to the control panel. The horn does not work, the lights do not work, and the battery condition meter does not work. Battery voltage travels from the batteries, through the controller and the key switch. The test below will verify that there is battery voltage at the batteries, the controller, the main harness, and the key switch.

Check Battery Voltage

1) Remove the seat.
2) Remove the battery cover.
3) Measure voltage across the terminal with the red wire on one battery and the terminal with the black wire on the other battery.
   - 24VDC (or battery voltage?) - Go to the next step.
   - More than 16VDC? - Try to recharge the batteries. Load test and replace if necessary.
   - 0VDC? - Check the battery fuse for continuity. Replace with 125A fuse if necessary. Check main circuit breaker (1) and main power harnesses for continuity (6a to 6b/6c and 7a to 7b/7c.) Replace as necessary.

Check Voltage at Controller

4) Unplug the power harness from the controller. This connection is marked with the + - symbol. Measure the voltage across the red and black wires.
   - 24VDC (or battery voltage?) - Go to the next step.
   - 0VDC? - Check circuit breaker and wire harnesses for continuity. Replace as necessary.

Check Voltage out of Controller

5) Make sure that the power harness is plugged back into the controller.
6) Insert the multimeter probes into the terminal with the red wire (pin 7) and the terminal with the black wires (pin 13) on the back of the main harness. Refer to the “Interface Socket Details” on page 8 and/or the wiring diagram on page 27.
   - 24VDC (or battery voltage?) - Go to the next step.
   - 0VDC? - Replace the controller.

Check Voltage at Main Harness

7) Place the multimeter probes into pin 1 and pin 2 (outside pins) of the charging port.
8) Measure voltage.
   - 24VDC (or battery voltage?) - Go to the next step.
   - 0VDC? - Replace the main harness.

Check Key Switch

9) Remove the front basket bracket.
10) Remove the front tiller shroud.
11) Open the control panel fuse holder. Check the fuse for continuity.
   - Open? - Replace the 3A fuse.
   - Less than 10 ohms? - go to the next step.

12) Disconnect the key switch connector from the main harness. Make sure that the key is in the on position. Measure continuity across the two pins on the key switch connector.
   - Continuity? - Replace the main wiring harness.
   - Open? - Replace the key switch.

Scenario 2: Batteries Will Not Charge

Most battery chargers need to "see" least 16VDC at the charger port. Otherwise, they may not send a charging current to the batteries. This test will ensure that the battery voltage is making it to the charger port. You will need to check battery voltage at the batteries, at the controller, out of the controller, and at the charger port.

Check Battery Charger Voltage

1) Remove the seat.
2) Remove the battery cover.
3) Plug the charger into the charger port and then into a wall outlet.
4) Measure voltage across the terminal with the red wire on one battery and the terminal with the black wire on the other battery. Does the voltage increase?
   - Yes? - Load test the batteries and replace as necessary.
   - No? - But there is voltage. If the voltage is lower than 16VDC, then replace the batteries. If the voltage is 16VDC or greater, then go to the next step.
   - No? - And there is no voltage. Check the circuit breaker, power wire harness, battery harnesses and their fuses for continuity. Replace the individual components as necessary.

Check Voltage Into the Controller

5) Measure voltage across the B+ (red wire) and B- (black wire) of the power harness. This is the large black connector on the controller marked with the symbol.
   - 24VDC (or battery voltage?) - Go to the next step.
   - 0VDC? - Check circuit breaker and wire harnesses for continuity. Replace as necessary.

Check Voltage Out of the Controller

6) Insert the multimeter probes into the terminal with the red wire (pin 7) and the terminal with the black wire (pin 13) on the back of the main harness (14-pin) connector. Refer to the wiring diagram on page 27.
   - 24VDC (or battery voltage?) - Go to the next step.
   - 0VDC? - Replace the controller.

Check Voltage at the Main Harness

7) Remove the front basket bracket.
8) Remove the front tiller shroud.
9) Disconnect the charger harness (red 3-pin connector with a red, green, and black wire) from the main harness.
10) Measure voltage across the two outside terminals, a black wire and a red wire on the main harness connector. Refer to the wiring diagram on page 27.
   - 24VDC (or battery voltage?) - Go to the next step.
   - 0VDC? - Replace the main harness.

11) Check the charger harness fuse for continuity.
   - Continuity? - Replace the charger harness.
   - Open? - Replace the 15A fuse.

BEEP CODES

The S-Drive controller uses audible beeps to indicate the status of the system. When the controller notices that there is a malfunction in the system, it will beep a code when the power is on. The signal will be a set of fast beeps lasting two seconds. The slower diagnostic pattern will then be sounded once. For example, when it Beeps five times and stops, that indicates BEEP code #5 – Brake Trip.

The following BEEP codes are used to help diagnose system errors:
BEEP Code #2 – Low Battery Voltage
BEEP Code #3 – High Battery Voltage
BEEP Code #5 – Solenoid Brake Trip
BEEP Code #6 – Throttle Trip (Out of Neutral)
BEEP Code #7 – Throttle Trip/Speed Control Fault (Voltage Error)
BEEP Code #8 – Motor Disconnected
BEEP Code #9 – Possible Controller Trip

BEEP CODE #2 – LOW BATTERY VOLTAGE

The batteries need charging or there is a bad connection to the batteries. Check the connections to the batteries. If the connections are good, try charging the batteries. If the batteries will not charge, load test them or refer to "Scenario 2: Batteries will not Charge."

BEEP CODE #3 - HIGH BATTERY VOLTAGE

An excessive voltage has been applied to the S-drive. This is usually caused by a poor battery connection. Check the battery connections. *NOTE: The error may only be present when going down hill and power goes back to the batteries.*
1) Insert the key into the key switch and turn it to the on position. Allow the battery level to drop. Do not allow the battery voltage to fall into the red area on the battery meter.
2) Check the battery charger. Make sure it is an approved charger.

BEEP CODE #5 – SOLENOID BRAKE TRIP

The parking brake has a bad connection. Check the parking brake and motor connections. Make sure all the system connections are secure.
1) Turn the key to the off position.
2) Disengage and then re-engage the park brake.
3) Turn the key to the on position. Did the flash code clear?
- Yes? - OK.
- No? - Go to the next step.

4) Remove the seat and the battery cover.
5) Disconnect the brake harness (2-pin connector) from the controller.
6) Make sure that the pins are seated properly. Measure resistance across pin 1 (red wire) and pin 2 (black wire) of the brake harness ***with the park brake engaged.***
- 80 ohms or less but not shorted? – Replace the controller.
- Shorted or open? – Go to the next step.

7) Disconnect the brake harness from the brake.
8) Make sure that the pins are seated properly. Make sure the contacts are not corroded or discolored. Check the continuity between pin 1 and pin 2 of the brake ***with the park brake engaged.***
- 80 ohms or less but not shorted? – Replace the brake harness.
- Corroded or discolored? – Replace as necessary.

- Shorted or open? – Replace the motor/brake assembly.

BEEP CODE #6 – THROTTLE TRIP (OUT OF NEUTRAL)
A throttle trip is indicated. Make sure the paddle is in the neutral position before switching on the scooter.
1) Turn the key to the off position.
2) Make sure that the paddle pot is not obstructed and it can return to the neutral (center) position.
3) Move the paddle forward and then reverse. Make sure that it is not obstructed. Does it spring back to neutral position?
- Yes? – Go to the next step.
- No? – Check for obstructions. Replace the dash assembly.

4) Turn the key to the on position. Does the code return?
- No? – OK
- Yes? – Go to FLASH CODE #7 to test the throttle pot.

BEEP CODE #7 – THROTTLE TRIP/SPEED CONTROL FAULT (VOLTAGE ERROR).
A throttle trip is indicated. Indicates a problem with the throttle control or speed control.
1) Remove the seat.
2) Remove the battery cover.
3) Turn the speed pot to ***full rabbit***.
4) Set your multimeter to measure resistance.
5) Disconnect the main harness from the controller.

7) Insert the multimeter probes into the main harness connector at pin 1 (yellow wire) and pin 8 (blue wire). Note the resistance reading. Insert the multimeter probe into the main harness connector at pin 1 (yellow wire) and pin 2 (orange wire). Note the resistance reading. Readings should be 2.5k ohm ±10%.
- Are both readings within 250 ohms? - Replace the controller.
- Either of the readings outside that range? - Go to the next step.

8) Remove the front basket bracket.
9) Remove the 10 screws that fasten the front tiller shroud to the rear tiller shroud.
10) Remove the 2 screws connecting the dashboard to the front tiller shroud.
11) Disconnect the (P1) connector from the dashboard.
12) Measure the resistance from the center pin (P0) of the throttle pot to either of the outside pins. Note the resistance reading. Measure the resistance from the center pin (P0) of the throttle pot to the opposite outside pin. Note the resistance reading. Readings should be 2.5k ohm ±10%.
- 2.5k ohm ±10%? - Note the resistance reading and go to the next step.
- Outside that range? - Replace the dash assembly.

13) Check the orange, blue, and yellow wires on the main harness for continuity. On the controller side, pin 1 (yellow),
pin 2 (orange), and pin 8 (blue). On the dashboard connector (P1), pin 1 (yellow), pin 2 (orange), and pin 3 (blue). Refer to the wiring diagram on page 27.
- 10 ohms or less on each one? - Replace the speed pot.
- Open on any wire? - Replace the main harness.

BEEP CODE #8 - MOTOR DISCONNECTED

Check the position of the freewheel switch. (Key must be turned off and back on to clear the fault code). The motor has a bad connection. Check all the connections and leads between the motor and the S-drive.

1) Remove the seat.
2) Remove the battery cover.
3) Disconnect the motor harness from the controller. This is the large gray connector marked with the symbol.
4) Make sure that the pins are seated properly on the motor harness.
4) Measure resistance across the motor + (thick red wire) and the motor – (thick black wire) on the motor harness.
   - 50 ohms but not shorted? (NOTE: Can be as low as 0.2 ohms.) – replace the controller.
   - Out of that range? – Go to the next step.

19) Remove the four brushes from the motor and inspect them. See figure 10 on page 17. Indications of a bad brush include broken springs, cracked carbon, black or discolored wire, and black or discolored contacts.

- Worn or physically damaged? – Replace the brushes.
- Not worn or physically damaged? - Replace the motor/brake assembly.

BEEP CODE #9 – POSSIBLE CONTROLLER TRIP

A control system trip is indicated. Make sure all connections are secure.

1) Make sure that all connections are secure.
   - If the code continues, then shut down the scooter and allow the controller to cool down.
   - If the problem still persists, then replace the controller.

Component Replacement Instructions

CONTROLLER REPLACEMENT

To replace the controller:

1) Place the freewheel lever in the engaged position.
2) Remove the key from the key switch.
2) Remove the seat.
3) Remove the four screws fastening the battery cover.
4) Unplug the connectors from the controller. Note the location of any wire ties used to secure the harnesses.
5) Remove the two screws that attach the controller to the controller bracket.
6) Remove the controller.
7) Install the new controller using the two screws removed in step 6.
8) Reconnect the harness connectors. See figure 3.
9) Reinstall the battery cover.
10) Reinstall the seat.
11) Insert the key into the key switch and operate the scooter.

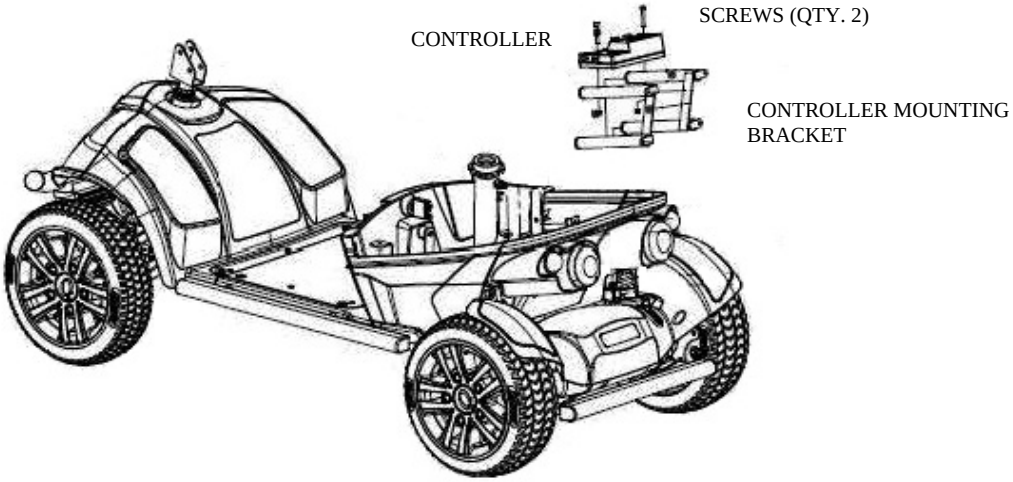

Figure 2. Controller Location

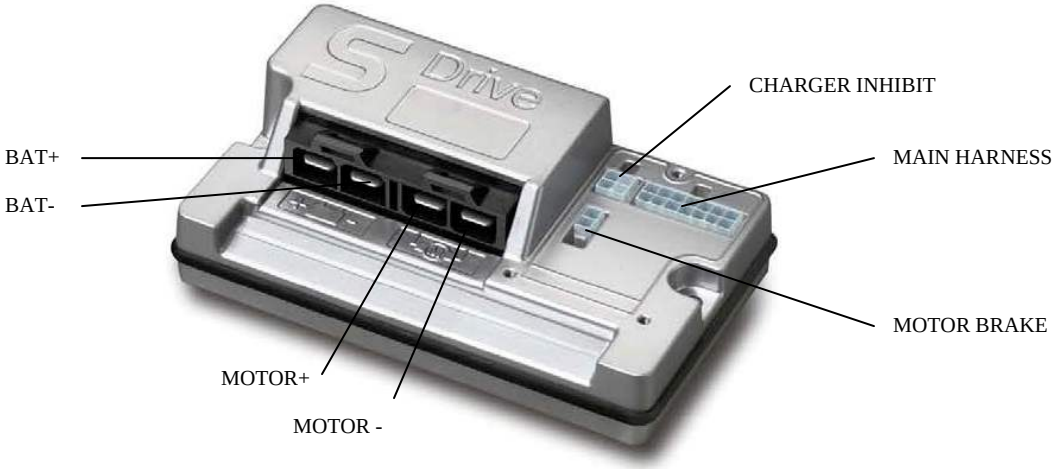

Figure 3. Controller Connections

DRIVE WHEEL REPLACEMENT

To replace the drive wheel:

1) Place the freewheel lever in the engaged position.
2) Remove the key from the key switch.
3) Place a support under the scooter frame to raise the drive wheel.
4) Remove the center cap.
5) Remove the 19mm nut and washer that fastens the drive wheel to the axle. See figure 4.
6) Remove the drive wheel from the axle. ***Retain the axle key.***
7) Place a new wheel onto the axle. ***Make sure the axle key is installed properly.***
8) Reinstall the nut and washer and tighten securely.
8) Reinstall the center cap.

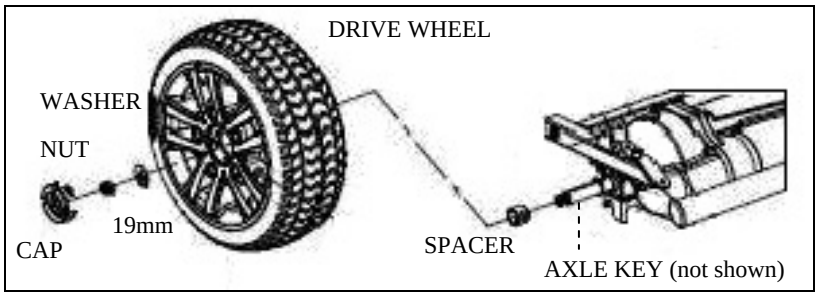

Figure 4. Drive Wheel

DASH REPLACEMENT

To replace the dash:

1) Place the freewheel lever in the engaged position.
2) Remove the key from the key switch.
3) Remove the (10) Phillips screws in the rear tiller cover. See figure 5.
4) Remove the (2) Phillips screws securing the basket bracket to the front tiller cover. See figure 6.
5) Remove the front tiller cover and the dash assembly by lifting them up.
6) Unplug the (4) cables from the dash and the (2) cables from the turn signals.
7) Remove the (2) Phillips screws on the underside of the dash, which secure the dash assembly to the tiller. See figure 7 on page 17.
8) Assembly in the reverse order.

Figure 5. Rear Tiller Cover

Figure 6. Basket Bracket

KEY SWITCH & HIGH/LOW SWITCH REPLACEMENT

To replace either switch:

1) Perform steps 1-7 of the dash replacement instructions on page 16.
2) Remove the (6) Phillips screws at the backside of the front tiller cover to access the switches. See figure 8.
3) Replace the switch(es) and assemble in reverse order.
4) Install the (6) Phillips screws removed in step 2 to secure the front tiller cover.
5) Perform steps 1-7 of the dash replacement instructions above in reverse order to complete the installation.

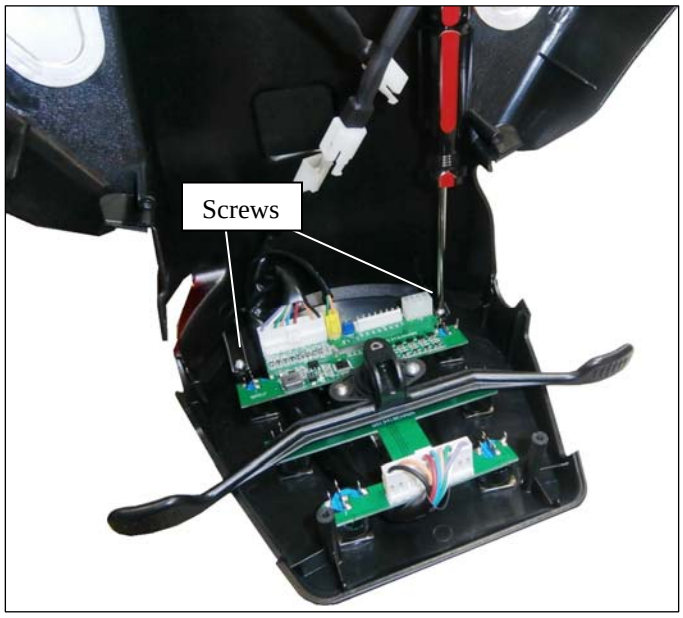

Figure 7. Inside Dash

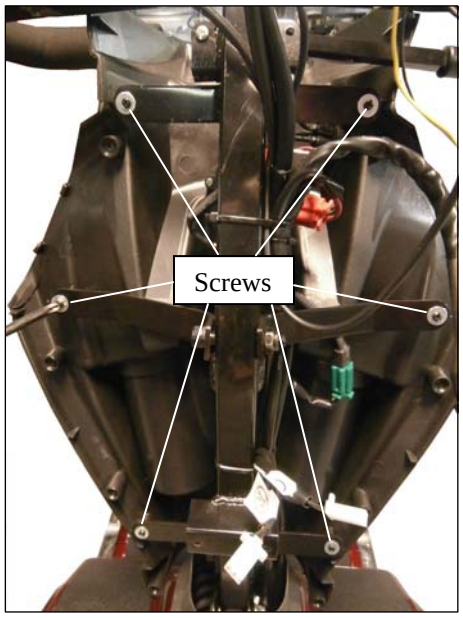

Figure 8. Inside Tiller (front section)

MOTOR BRUSH REPLACEMENT

To replace the motor brushes:

1) Remove the rear shroud. See figure 11 on page 18.
2) Remove a brush cap with a slotted screw driver.
2) Remove brush by gently prying it out of the holder.
3) Inspect the brush for discoloration, carbon build up, rust, uneven or excessive wear.
4) If defective, replace brush.
5) Repeat steps 2-4 for all four brushes. See figures 9 and 10.

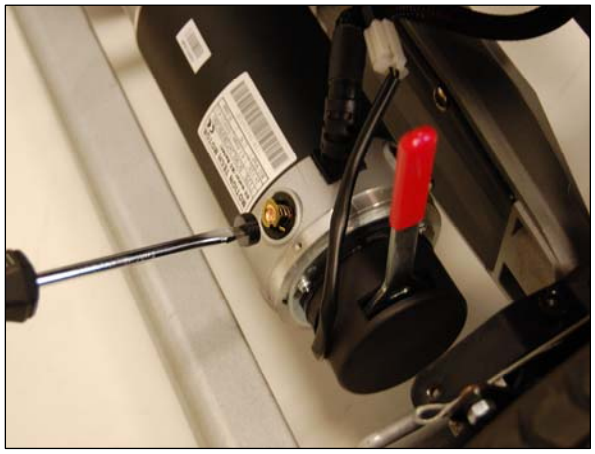

Figure 9. Motor Brush Caps

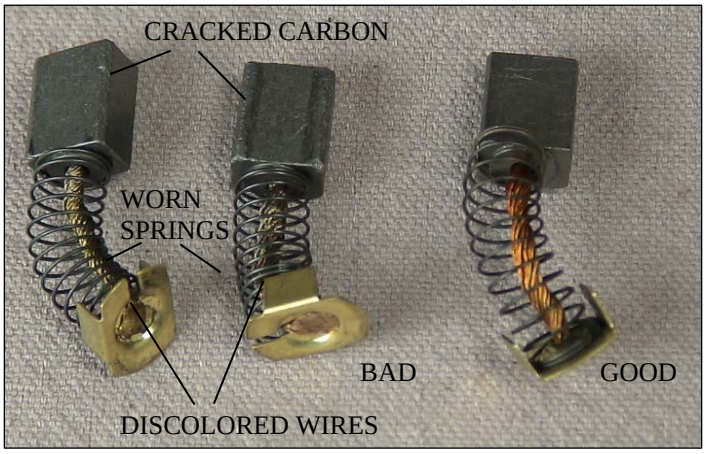

Figure 10. Brushes (shown removed)

MOTOR/BRAKE REPLACEMENT

To replace the motor/brake assembly:

1) Place the freewheel lever in the engaged position.
2) Remove the key from the key switch.
3) Remove the seat.
4) Remove the battery cover. *(Optional: removal of the batteries will reduce the weight.)*
5) Disconnect the motor and brake connections at the controller.
6) Remove the (4) Phillips screws that fasten the rear shroud and remove the shroud. See figure 11.
7) Cut the tie wrap(s) securing the motor/brake cable. See figure 12.
8) Remove the (2) 5mm Allen bolts (top and bottom bolts only) from the transaxle. See figure 12.
9) Slide the motor off the transaxle. Retain the motor coupler.
10) Install the motor coupler onto the shaft of the new motor/brake assembly.
12) Assemble in the reverse order.

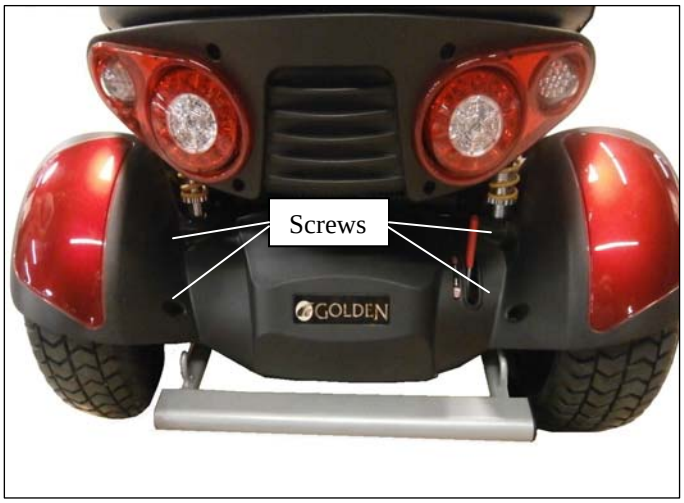

Figure 11. Rear Shroud

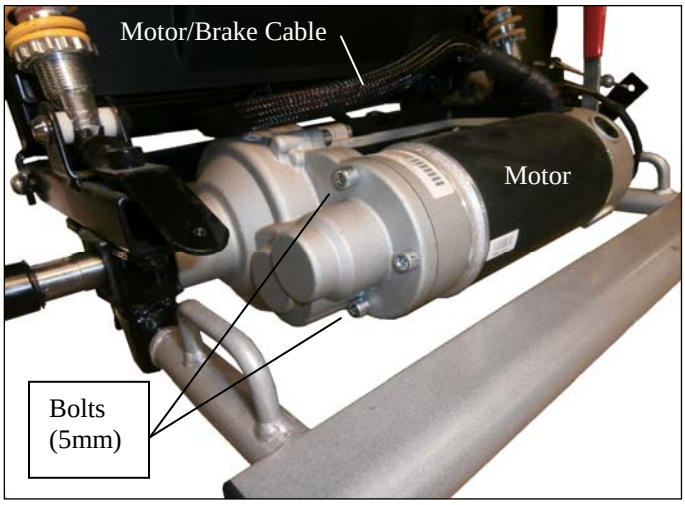

Figure 12. Motor/Brake Assembly

TRANSAXLE REPLACEMENT

To replace the transaxle:

1) Perform steps 1-7 of the motor/brake replacement instructions.
2) Place a support under the scooter frame forward of the u-brackets to raise the drive wheels off the ground to allow removal of the transaxle. See figure 11.
3) Remove the center cap.
4) Remove the nut and washer that fastens the drive wheel to the axle. See figure 4 on page 16.
5) Remove the left-side drive wheel from the axle. ***Retain the axle key.***
6) Remove the right-side drive wheel.
7) Slide the drum off the transaxle. See figures 13 and 14 on page 19.
8) Remove the hand brake cable.
9) Remove the hand brake assembly. ***Retain the axle key.***
10) Remove the (2) 8mm bolts connect each u-bracket. Repeat on the opposite side. See figure 14 on page 19.
11) Remove the transaxle from the rear frame.
12) Assemble in the reverse order.

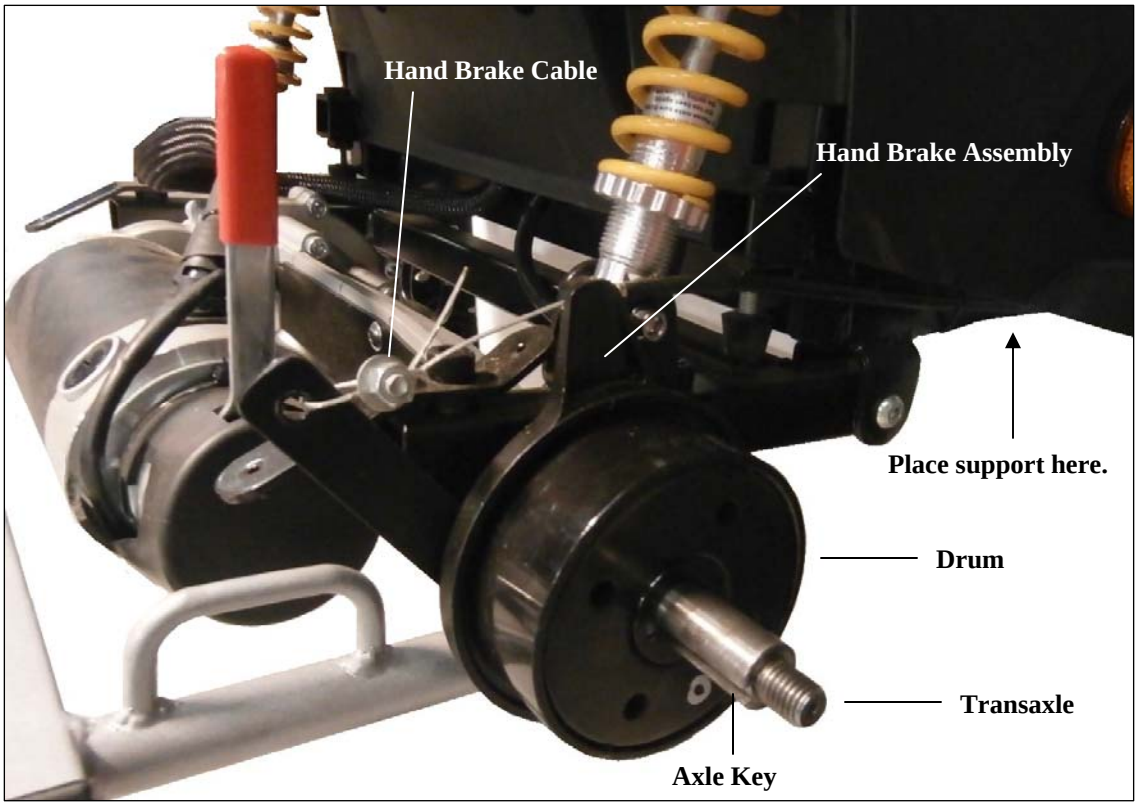

Figure 13. Drum Brake (Rear Section)

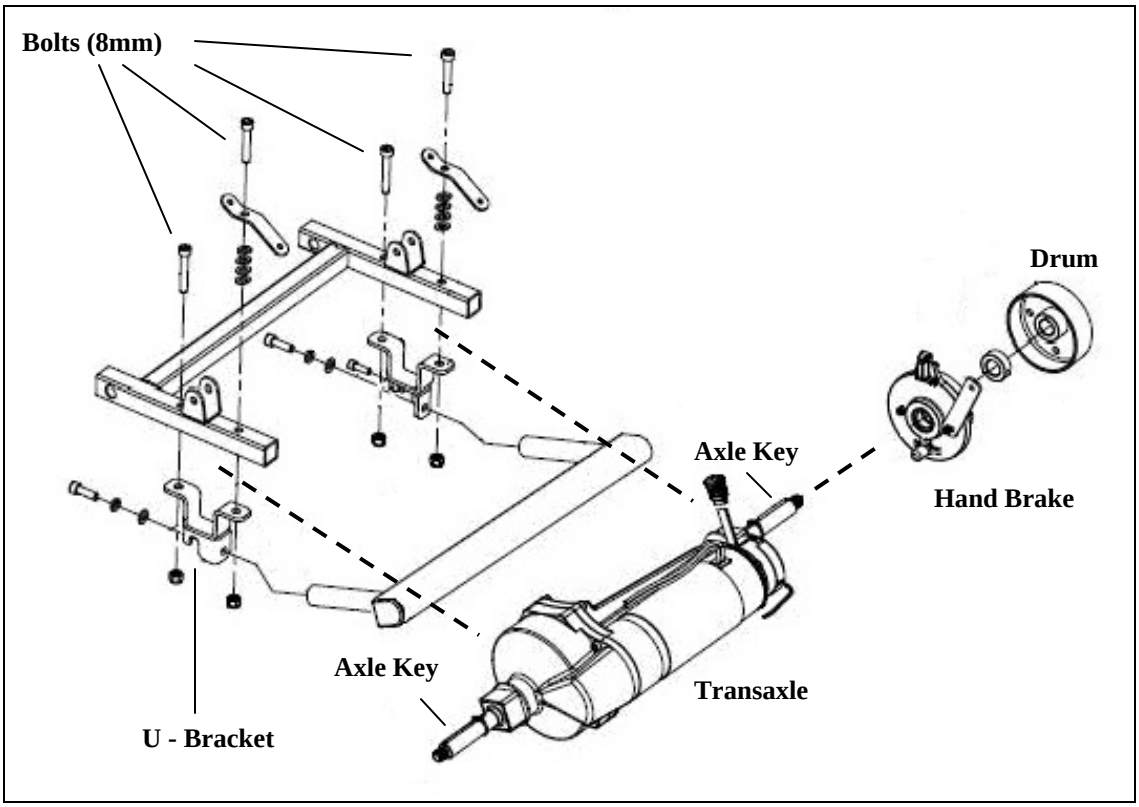

Figure 14. Scooter (Rear Section)

BATTERIES

To replace the batteries:

1) Place the freewheel lever in the engaged position.
2) Remove the key from the key switch.
3) Remove the seat.
4) Remove the battery cover, by removing the four screws located at the top of the cover.
5) Unplug each battery harness from the scooter.
6) Undo the Velcro strap on each battery.
7) Lift each battery out of the scooter.
8) Remove the RED (B+) and BLACK (B-) wires from each battery.

WARNING **The circuit breaker is wired between the B+ of one battery and the B- of the opposite battery. Make sure the polarities are correct when connecting the batteries.**

9) Attach the RED (B+) and BLACK (B-) wires to each battery.
10) Place the two new batteries into the scooter matching the color coded connectors of the battery cables to the connectors in the scooter.
11) Tighten down the Velcro strap on each battery.
12) Replace the battery cover and secure with the four screws.
13) Reinstall the seat.
14) Insert the key and test the scooter.

NOTICE **The batteries must be placed into the battery compartment with the terminals facing inward. See figure15.**

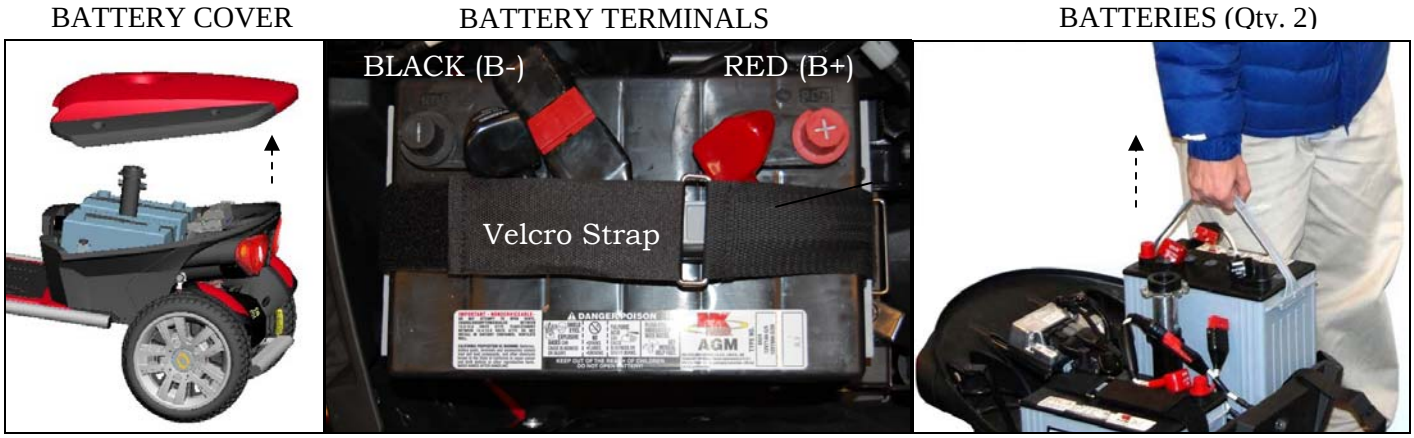

Figure 15. Battery Compartment

WARNING **Prevent electrical shock and damage to the batteries or scooter. Make sure the polarities are correct before connecting the two new batteries. See figure 15.**

SHROUDS

To replace the center floor shroud:

1) Perform steps 1-7 of the battery replacement instructions on page 20.
2) Disconnect the power harness from the controller.
3) Remove the (4) Phillips screws inside the battery compartment from the front panel. See figure 16.

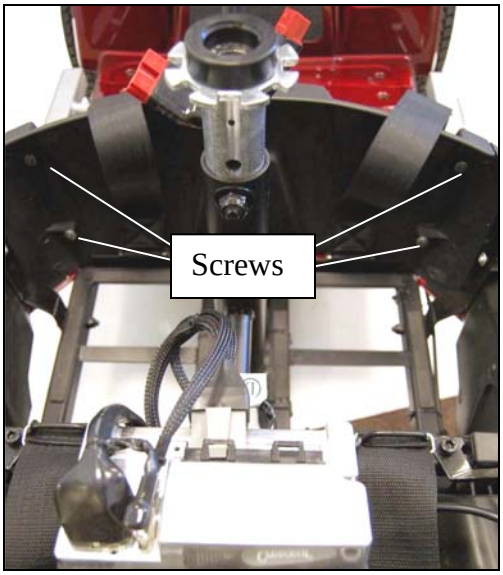

Figure 16. Inside Battery Compartment

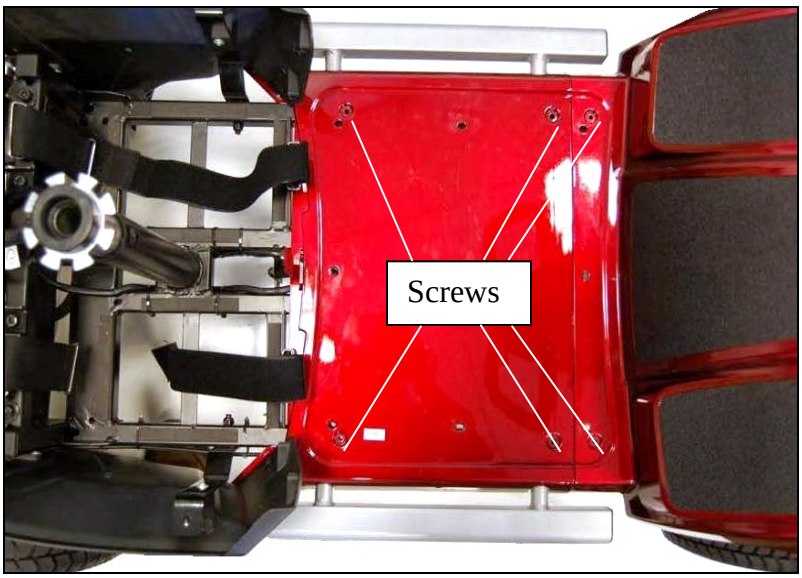

Figure 17. Center Floor Shroud

4) Remove the Phillips screw located directly under the circuit breaker, and remove the front battery compartment panel.
5) Remove the rubber floor mat by lifting it upward.
6) Remove the (6) Phillips screws and (6) 7mm lock nuts under the floor mat. See figure 17.
7) Remove the Phillips screws from each side battery compartment panel, (1) on each side (forward screws only) and lift up on the panels to unlock them from the floor. See figure 18.

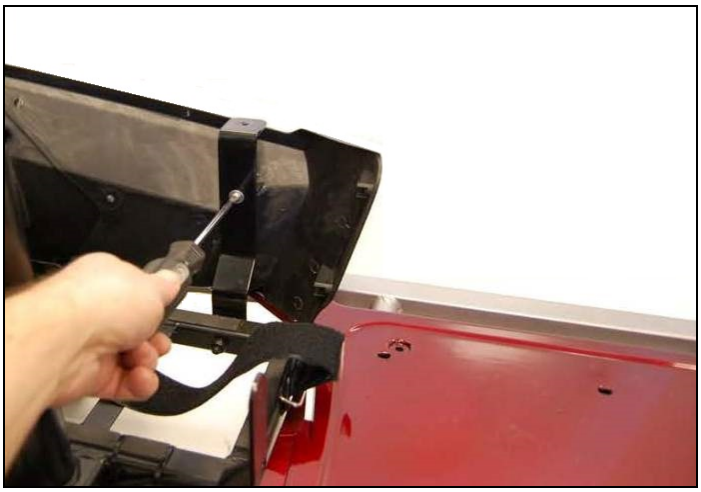

Figure 18. Battery Compartment Panel (Left-side)

Figure 19. Wheel Well (Right-side)

8) Remove the Phillips screws inside the front wheel wells. Each side has (1) screw going vertically up through the cross member. See figure 19.
9) Push the front shroud forward and lift the center floor shroud to remove. See figure 20 on page 22.
10) Reassemble in the reverse order.

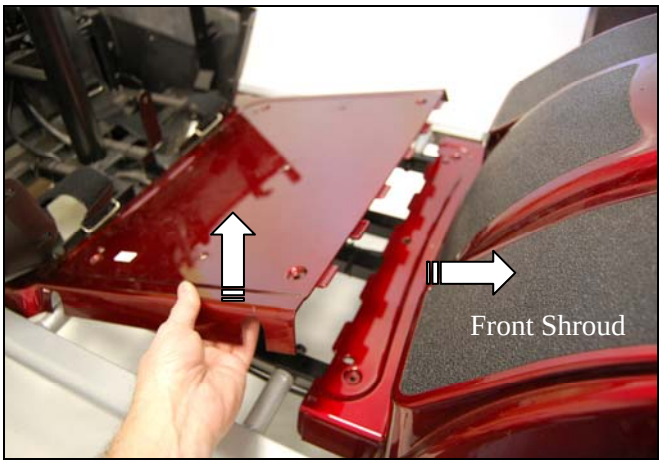

Figure 20. Removing Center Floor Shroud

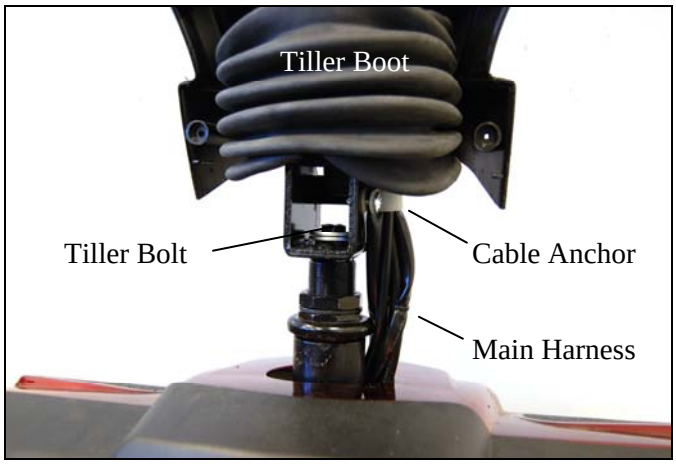

Figure 21. Tiller Removal

To replace the front shrouds:
1) Perform steps 1-9 of the center floor shroud replacement instructions above.
2) Remove the (10) Phillips screws in the rear tiller cover. See figure 5 on page 16.
3) Unplug P1, P2, and P3 from the dashboard, the speed pot and handbrake from the main harness.
4) Set the dash and front tiller shroud aside.
5) Lift the rubber tiller boot to access the main harness anchor and the tiller bolt. See figure 21.
6) Remove the main harness the anchor and tie wraps securing it to the tiller. ***Note harness placement for reassembly.***
7) Use a 13 mm wrench to loosen the tiller bolt, remove the entire tiller assembly and set it aside for reassembly.
8) Disconnect the (4) head light wires underneath the front shroud.
9) Remove the Phillips screw located directly behind the front bumper.
10) Lift the front shroud upward and over the tiller stem to remove it. ***Note: At this point, all of the front shroud components can be easily accessed for independent replacement.***
11) Reassemble in the reverse order.

To replace the battery compartment shrouds:
1) Perform steps 1-4 of the center floor shroud replacement instructions above.
2) Remove the (2) 6mm Allen bolts connecting the controller bracket to the scooter frame. They are located inside the battery compartment directly behind the seat pedestal. See figure 22. ***Note: If the bolts will not turn freely, loosen them by tapping the bolt heads with a hammer.***

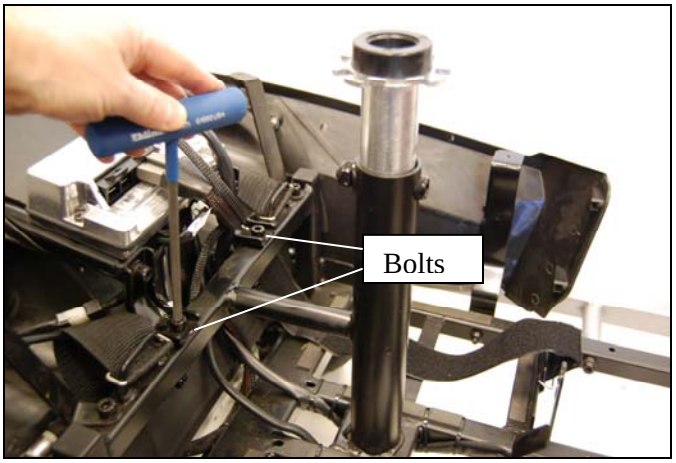

Figure 22. Controller Bracket Removal

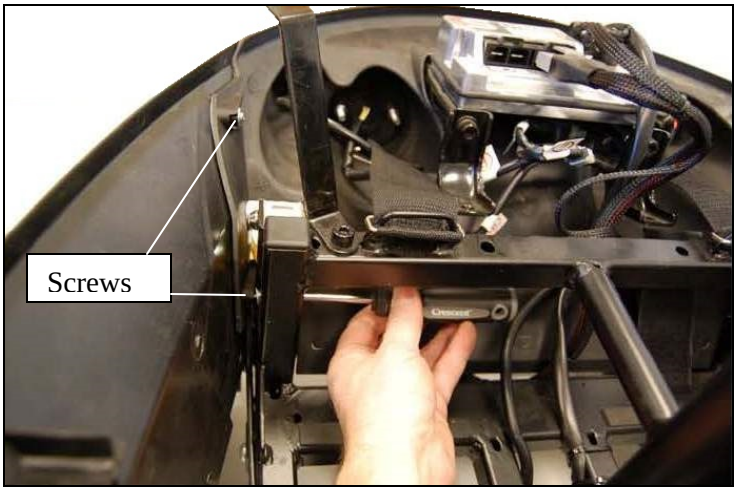

Figure 23. Side Panel Removal (Right-side)

Figure 24. Shock Bolt Removal

3) Remove the 4 Phillips screws connecting the side battery compartment panels to the rear panel. There are 2 screws on each side, a top and a bottom screw. See figure 23. ***Note: It maybe necessary to maneuver the panels to gain access to the screws with your screwdriver.***
4) Disconnect the controller cables.
5) Remove the 2 upper shock mating bolts, 1 on each shock using a 5mm Allen wrench. See figure 24.
6) Slide the rear battery compartment panel upward over the shocks and lay the panel flat on the ground. See figure 25.

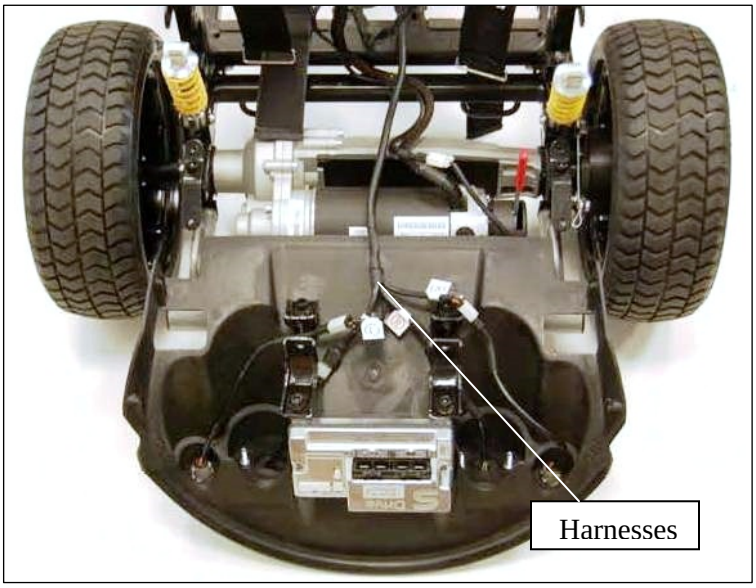

Figure 25. Rear Battery Compartment Panel

7) Disconnect the 4 rear light harnesses and remove the rear panel.
8) Reassemble in the reverse order.

APPENDIX A - HOW TO USE A VOLTMETER

Step 1
Plug the probes into the meter. Red goes to the positive (+) and black to the negative (-).

Step 2
Turn the selector dial or switch to the type of measurement you want. To measure direct current - a battery, for example - use DCV. To measure alternating current, such as a wall outlet, use ACV.

Step 3
Choose the range setting. The dial may have options from 5 to 1000 on the DCV side and 10 to 1000 on the ACV side. The setting should be the top end of the voltage you are reading. Not all voltmeters have this setting.

Step 4
Turn the meter on.

Step 5
Hold the probes by the insulated handles and touch the red probe to the positive side of a DC circuit or either side
of an AC circuit. Touch the other side with the black probe.

Step 6
Read the digital display or analog dial.

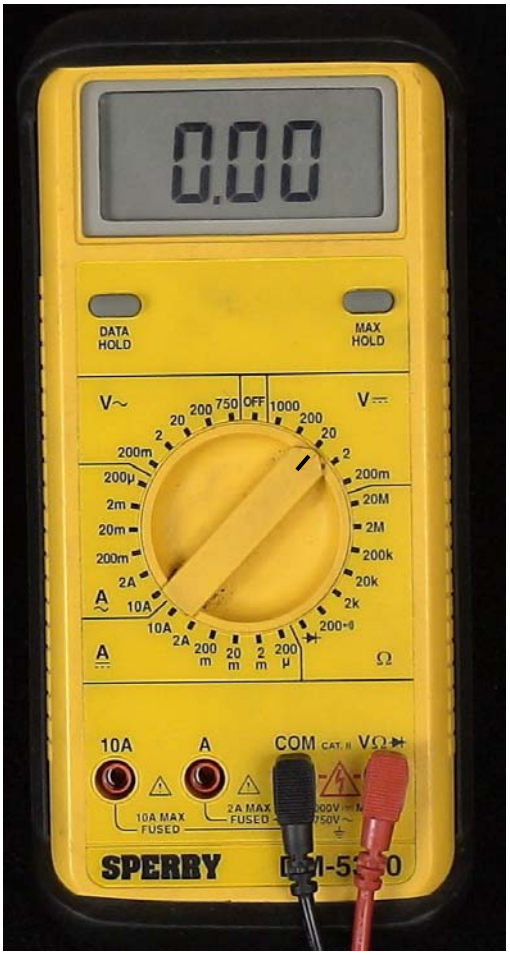

Figure 26. Multimeter (Set to DC Volts)

APPENDIX B - HOW TO USE AN OHM METER

Ohm's law breaks down into the basic equation: Voltage = Current x Resistance. Current is generally measured in amps, and resistance in ohms. Testing the resistance on an electrical circuit in your home or car can help you diagnose problems with that circuit. You can use a simple ohmmeter for this task, but most professionals now use the ohmmeter function of a multimeter (also called multitester or VOM, for volt/ohmmeter). Read on for instructions on how to use an ohmmeter and test for resistance.

- Ohmmeter or Multimeter (Volt/ohmmeter)
- Circuit to test (with all power OFF)
- Service manual

Step 1
Disconnect completely and/or turn OFF all power to the circuit you are testing. You must have a completely dead wire or circuit in order to ensure accuracy in measurement, as well as your own safety. Your ohmmeter will supply the voltage and current for your circuit so NO other power is necessary. Testing a powered circuit can "cause damage to the meter, circuit, and *you*."

Step 2
Connect testing wires to the ohmmeter. The black wire goes to the ground (common) outlet, the red wire to the volt/ohms outlet.

Step 3
Consult a service manual for the normal range of resistance for the circuit you are testing.

Step 4
Set the dial to the "ohms" setting with a multimeter. On an individual ohmmeter, you may have to set a range for the readings, in ohms, kilohms or megohms. Use the range you located in your service manual to set the dial.

Figure 27. Multimeter (Set to Ohms)

APPENDIX C - WIRING DIAGRAMS

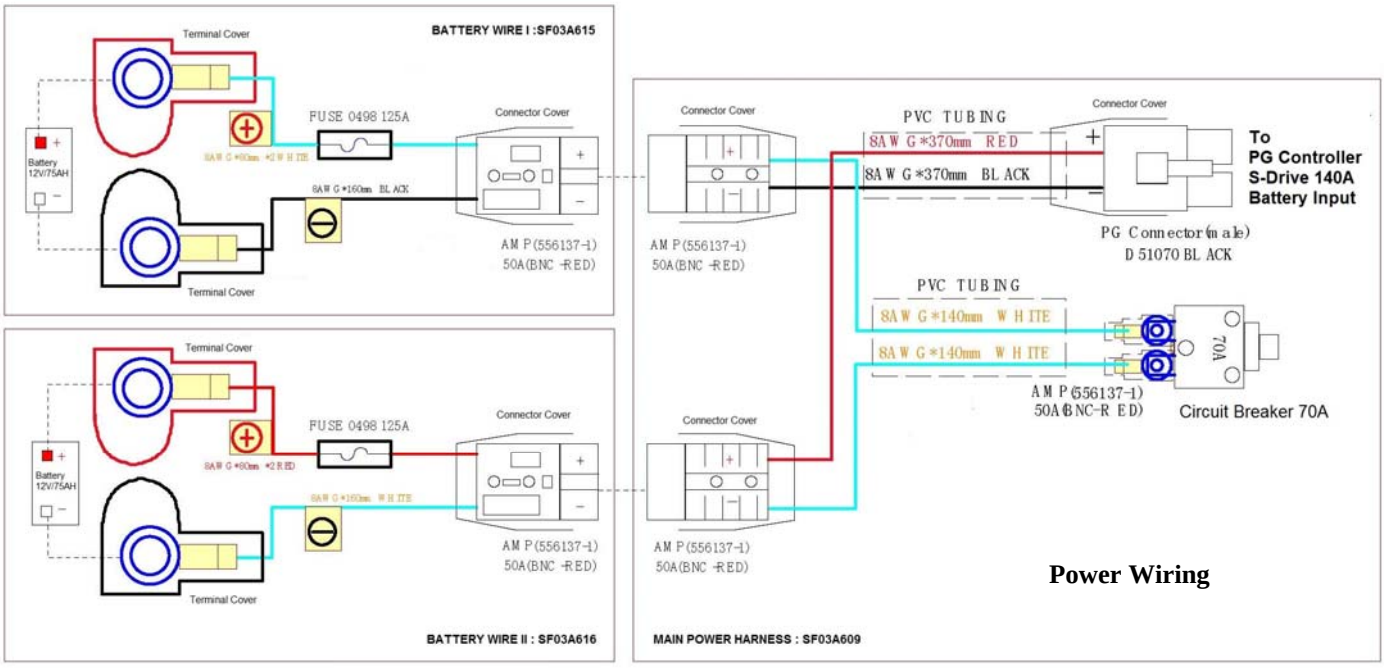

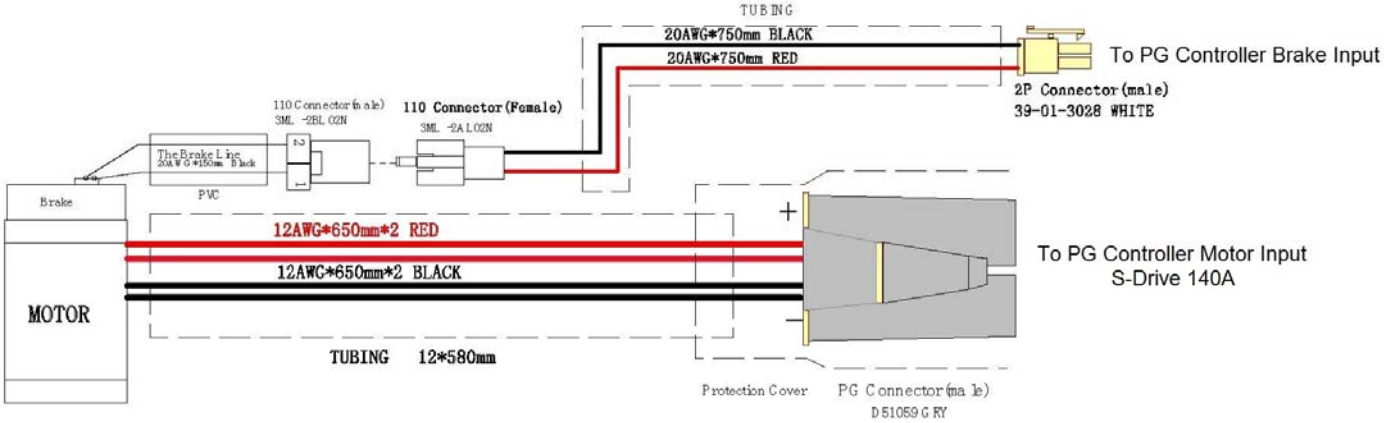

MOTOR/BRAKE ASSEMBLY WIRING

SF03A621

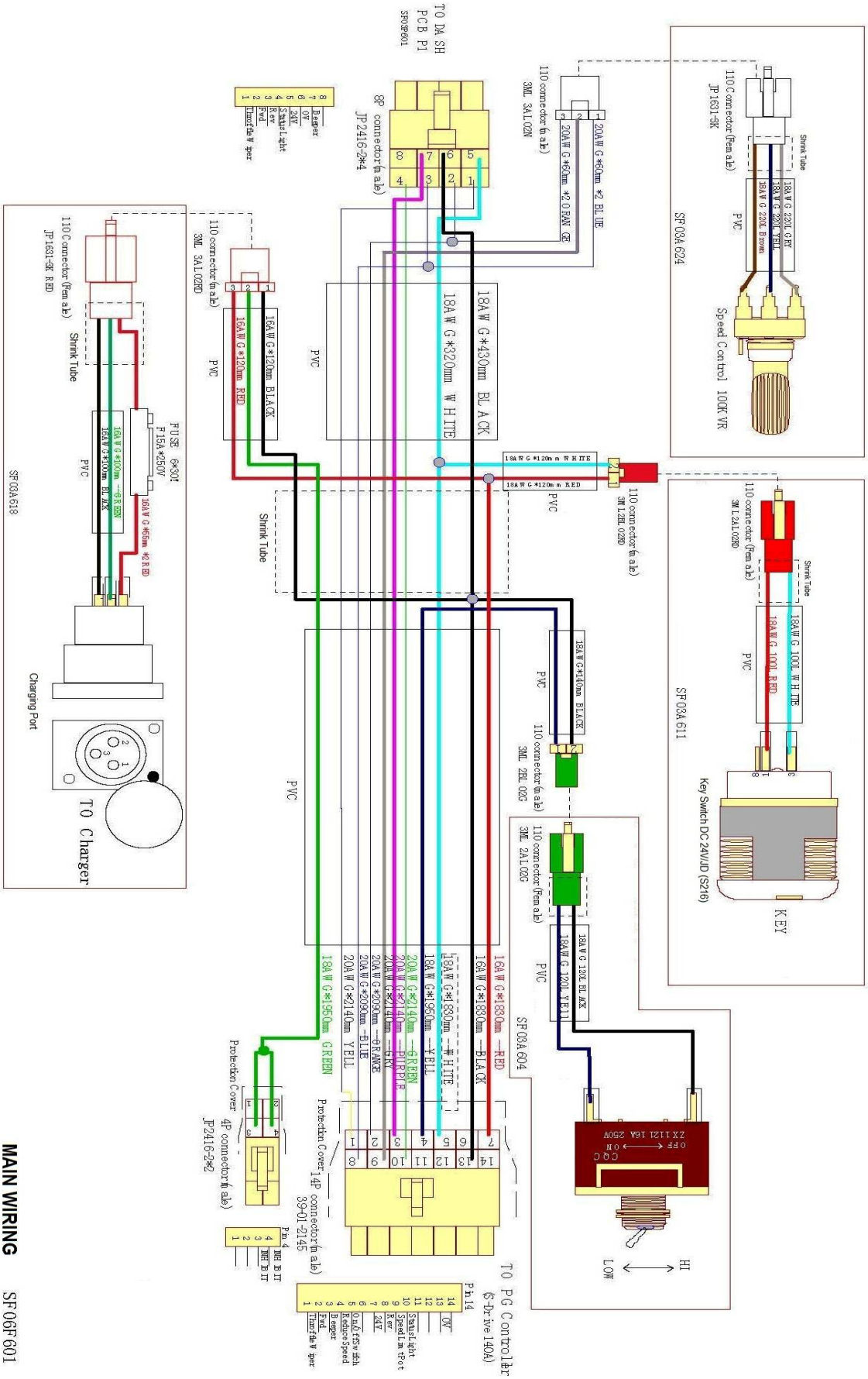
TO DA SH
PCB P1
SF03F601
8P connector(male)
JP2416-2*4
110 connector(male)
3ML 3AL02N
20AW G*60mm *2 BLUE
20AW G*60mm *2 ORANGE
18AW G*430mm BLACK
18AW G*320mm WHITE
PVC
Shrink Tube
110 Connector(Female)
JP1631-3K
SF03A624
Speed Control 100K VR
18AW G 220L GRY
18AW G 220L YELL
18AW G 220L Brown
110 connector(male)
3ML 3AL02RD
16AW G*120mm BLACK
16AW G*120mm RED
110 Connector(Female)
JP1631-3K RED
FUSE 6*30!
F15A*250V
16AW G*100mm -GREEN
16AW G*100mm BLACK
16AW G*65mm *2 RED
SF03A618
Charging Port
TO Charger
18AW G*120mm WHITE
18AW G*120mm RED
110 connector(male)
3ML 2BL02RD
110 connector(Female)
3ML 2AL02RD
18AW G 100L WHITE
18AW G 100L RED
SF03A611
Key Switch DC 24V/JD (S216)
KEY
18AW G*140mm BLACK
110 connector(male)
3ML 2BL02G
110 connector(Female)
3ML 2AL02G
18AW G 120L BLACK
18AW G 120L YELL
SF03A604
16AW G*1830mm -RED
16AW G*1830mm -BLACK
18AW G*1950mm -WHITE
18AW G*1950mm -YELL
20AW G*2140mm -GREEN
20AW G*2140mm -PURPLE
20AW G*2140mm -GRY
20AW G*2090mm -ORANGE
20AW G*2090mm -BLUE
20AW G*2140mm YELL
18AW G*1950mm GREEN
Protection Cover
4P connector(male)
JP2416-2*2
Protection Cover
14P connector(male)
39-01-2145
TO PG Controller
(S-Drive 140A)
Pin 14
0V
Status Light
Speed Limit Pot
Rev
24V
On/Off Switch
Reduce Speed
Beeper
Fwd
Throttle Wiper
HI
LOW
MAIN WIRING
SF06F601

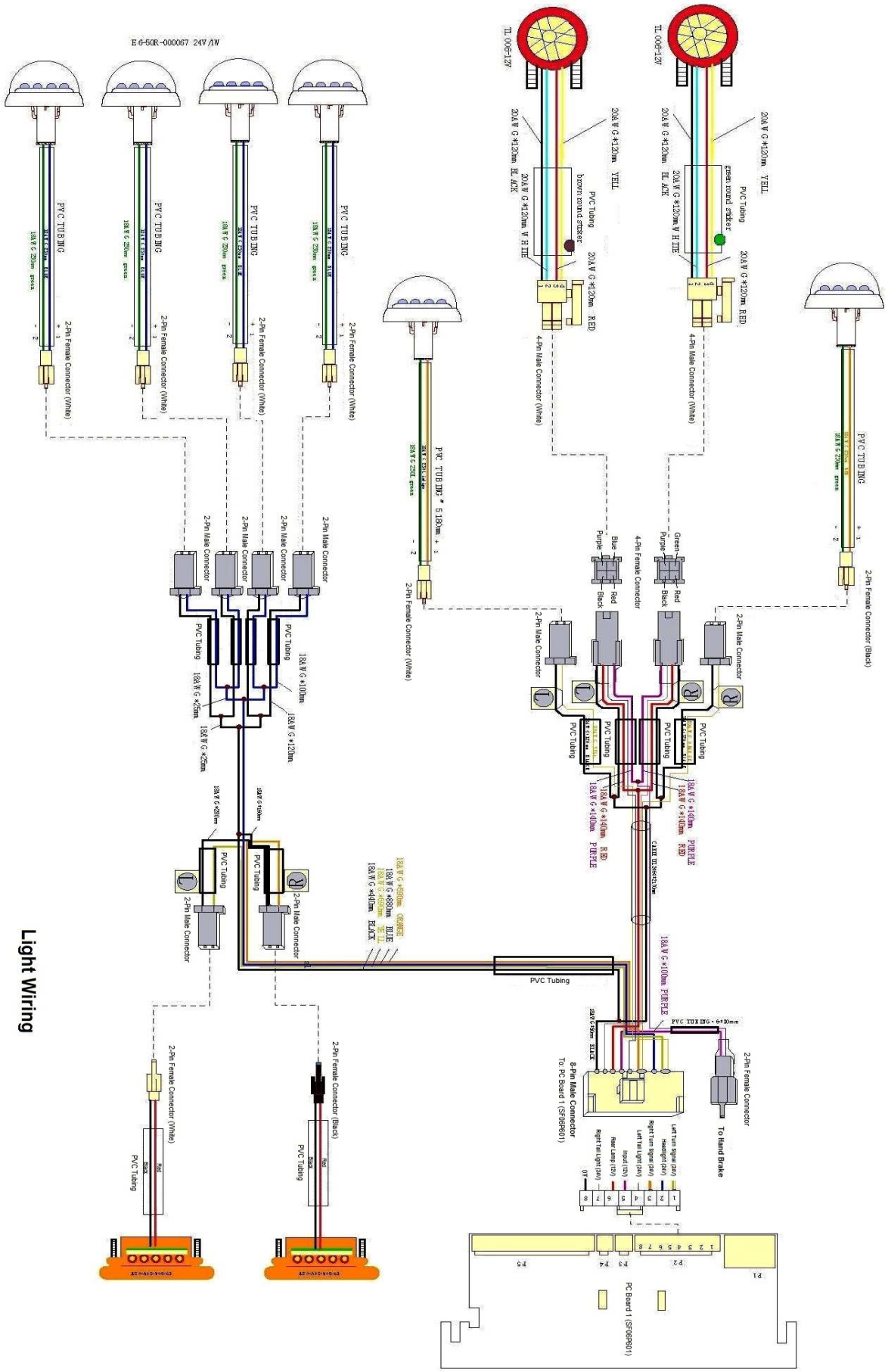

Light Wiring

ILLUSTRATED PARTS BREAKDOWN

PATRIOT

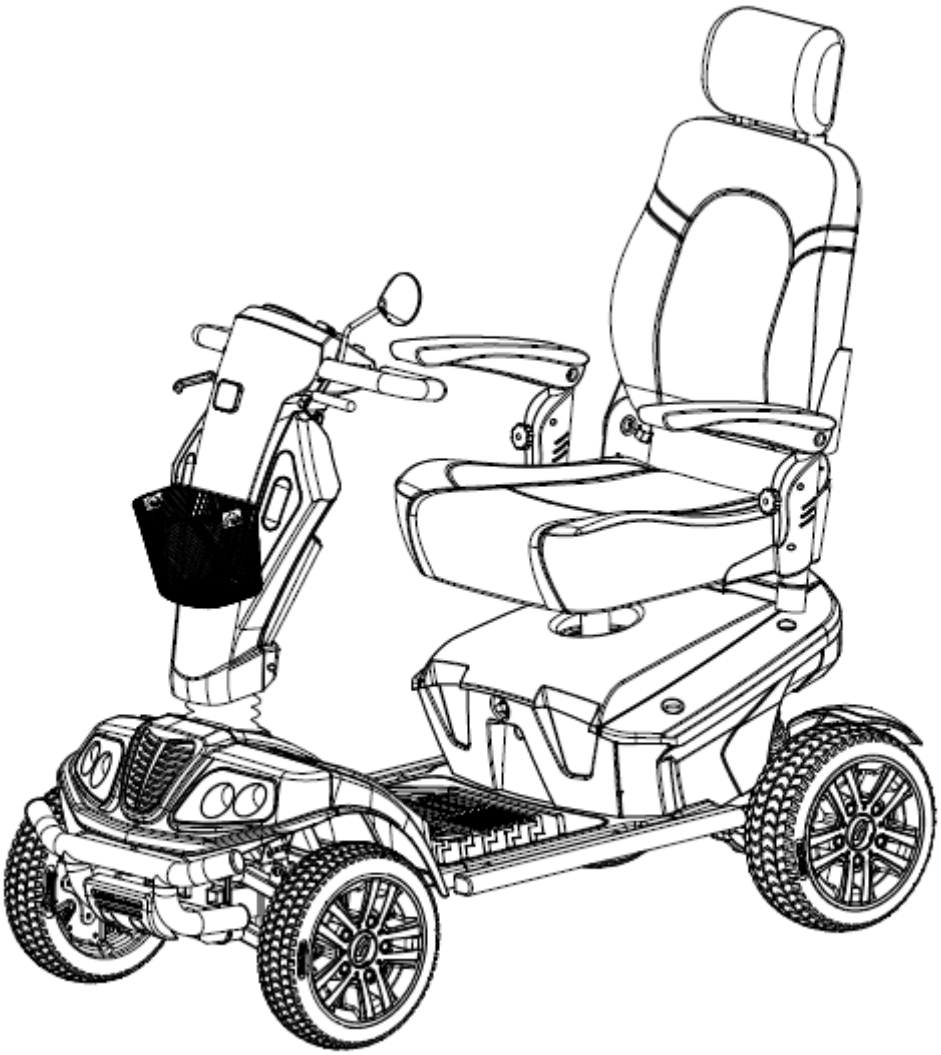

MODEL GR575

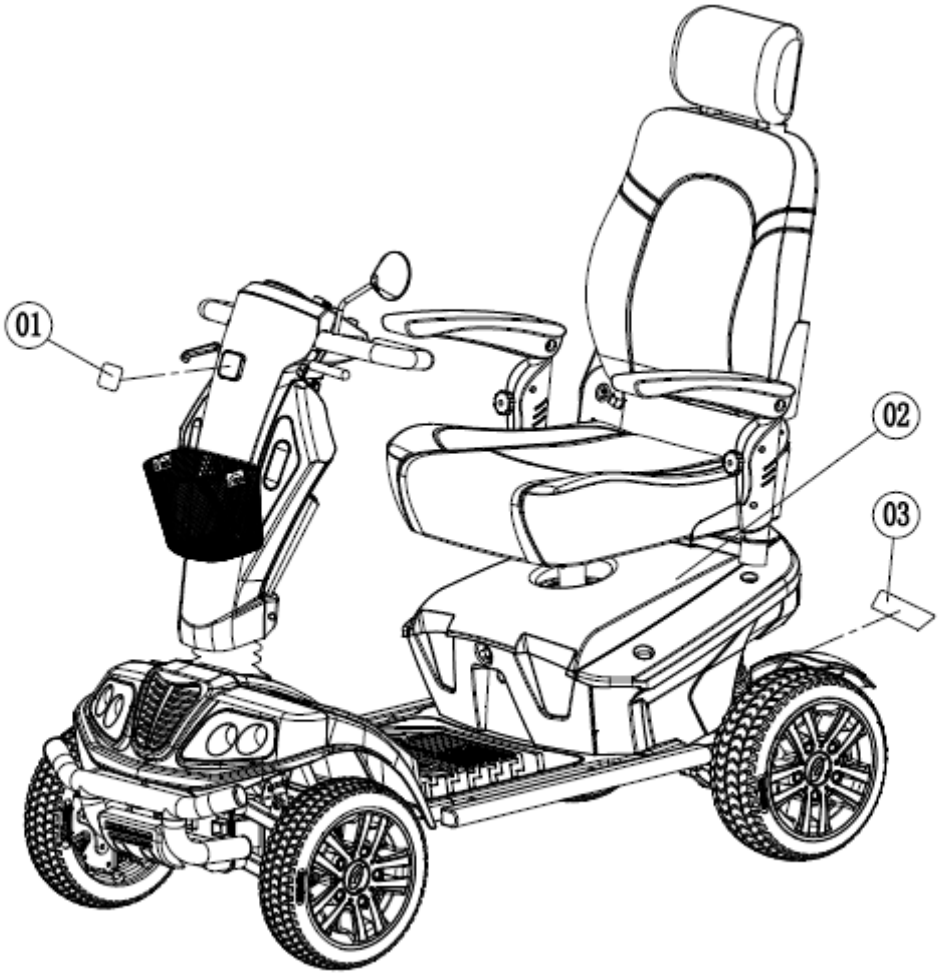

GR575 Complete Vehicle (SF06E112)

ITEM	PART NO.	DESCRIPTION	QTY.
01	SF06P543	Logo, Front PVC	1
02	SF06E113	Vehicle, Complete Assembly	1
03	SF06P542	Label, Back Cover PVC	1

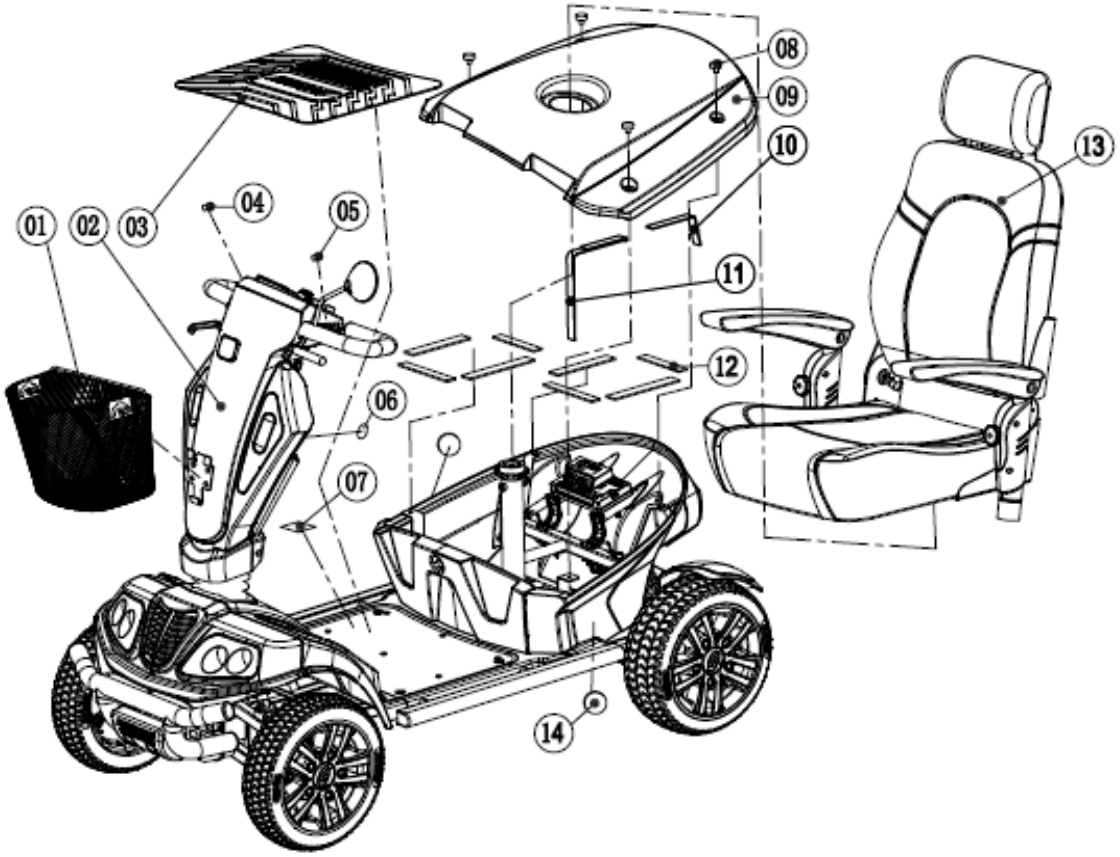

Complete Vehicle Assembly (SF06E113)

ITEM	PART NO.	DESCRIPTION	QTY.
01	SE06A108	Basket Assembly	1
02	SF06E114	Tiller Assembly	1
03	MBB-575D-FLMAT	Rubber Floor Mats for GR575 (SF06P530)	1
04	SF03P555	Label, Right-side Paddle PVC	1
05	SF03P556	Label, Left-side Paddle PVC	1
06	SF06P532	Label, Maximum Load Capacity 32*25 PVC	1
07	SF06P544	Label, Serial Number	1
08	SF03A502	Screw, Knob M5*16L PP	4
09	SF06P505	Cover, Back ABS	1
10	SF03A111	Strap, Battery	2
11	SF03A112	Strap, Single Button Battery	2
12	SE05P144	Pad, EVA	8
13	SF06E401	Seat Assembly	1
14	MBB-575D-SRFLCT	Reflectors for sides with adhesive backing for GR575 (SH02A502)	2
N/A	3052512110	Battery, 12V75AH	2
N/A	MBE-575D-BCH	Battery Cable Harness Sets with circuit breaker for GR575	1

N/A – Not shown in the illustration.

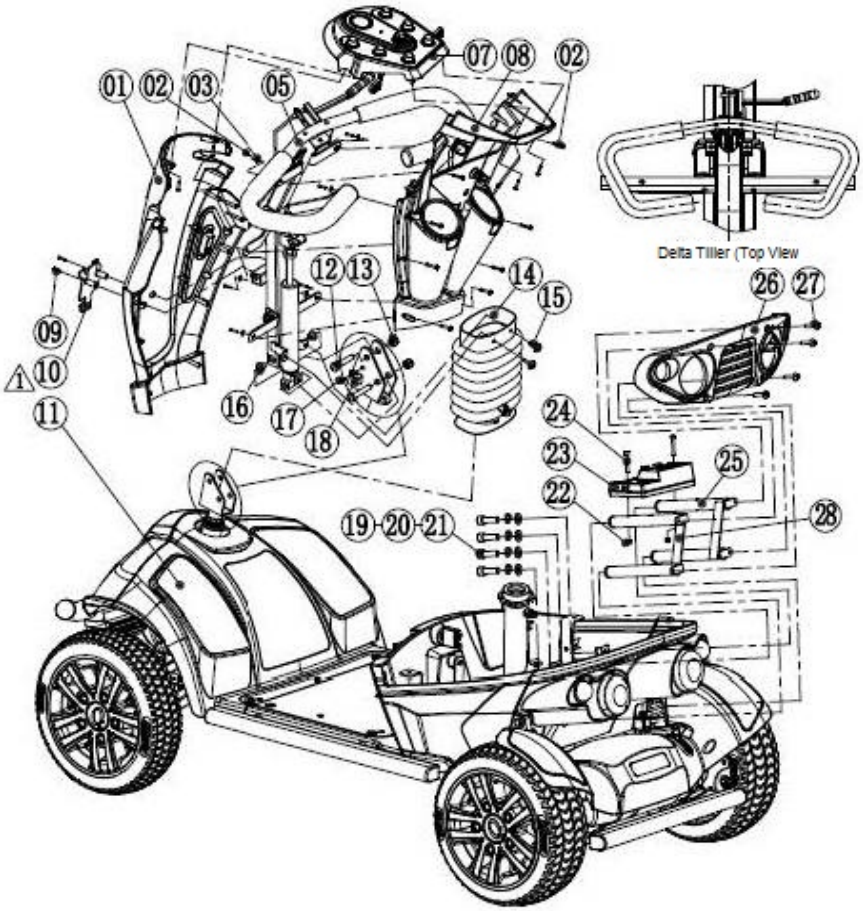

Tiller Assembly (SF06E114)

ITEM	PART NO.	DESCRIPTION	QTY.
01	MBB-575D-FTC	Front Tiller Cover complete with lights and decal for GR575 (SF06E504)	1
02	3110903112	Screw, Phillips Pan Head Self-Tapping ST3.5*16L	18
03	3000404011	Washer, Ø4*Ø9*0.8	10
N/A	3003700010	Mirror, Left-side Rear View M8	1
05	SF03E201	Tiller, Delta Handle	1
N/A	SF03A602	Handbrake, Assembly	1
07	SF06E503	Console, Cover Assembly	1
08	MBB-575D-RTC	Rear Tiller Cover complete with cup holders and horn for GR575	1
09	3111005032	Screw, Phillips Head M5*30L	2
10	SF06A206	Basket, Bracket	1
11	SF06E103	Shroud, Body	1
12	SE1P227A	Screw, Large Flat Head Socket M8*47L	2
13	3100308012	Nut, Nylon M8	2

ITEM	PART NO.	DESCRIPTION	QTY.
14	SE06P512	Tiller, Rubber Boot	1
15	3111704012	Screw, Phillips Self-Tapping with Washer ST4.2*13L	2
16	SE1P209A	Sleeve, Brass	2
17	3111704041	Screw, Phillips Self-Tapping with Washer ST4.8*13L	3
18	SE1P222A	Clamp, Cable PA66	1
19	3110308089	Screw, Hexagon Socket Head Cap M8*25L	4
20	3003108012	Washer, Spring Ø8	4
21	300408012	Washer, Ø8.4*Ø16*1.6	4
22	3100305012	Nut, Nylon M5	2
23	3051600200	Controller, S-DRIVE 140A	1
24	3110605112	Screw, Cross Recessed Pan Head M5*50L	2
25	SF06A104	Bracket, Right-side Controller Connection	1
26	SF06E501	Back Cover, Black	1
27	3110604022	Screw, Cross Recessed Pan Head M4*10L	4
28	SF06A103	Bracket, Left-side Controller Connection	1
N/A	MBE-575D-MWH	Main Wire Harness for GR575	1

N/A – Not shown in the illustration.

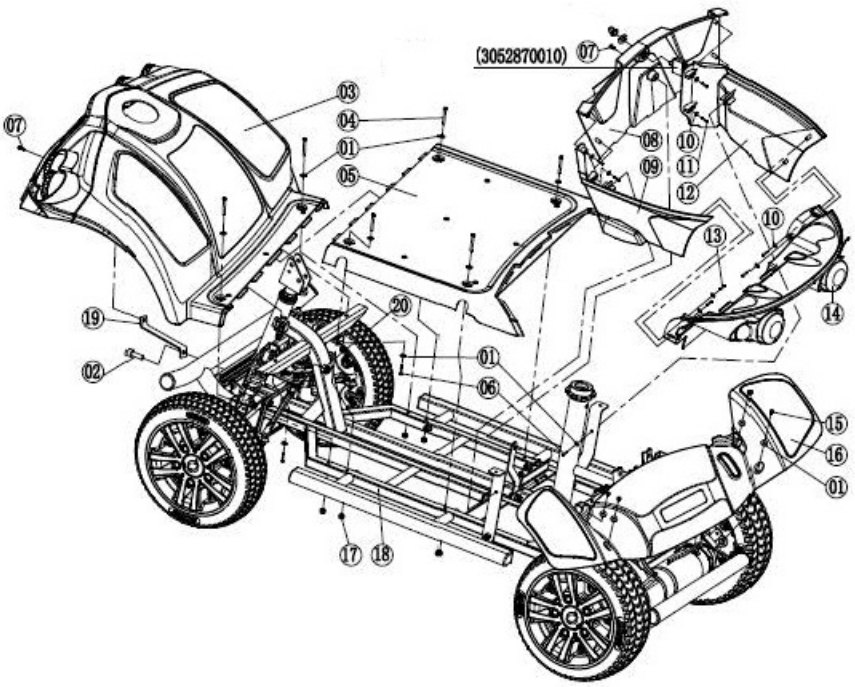

Vehicle Body Shroud Assembly (SF06E115)

ITEM	PART NO.	DESCRIPTION	QTY.
01	3000404042	Washer, Ø4.3*Ø8*0.5	14
02	3110308099	Screw, Hexagon Socket Head Cap M8*20L	1
03	SF06E505	Shroud, Front Cover Assembly	1
04	3110604122	Screw, Cross Recessed Pan Head M4*35L	6
05	MBB-575D-RDECK	Red Deck for GR575 (SF03P513)	1
05	MBB-575D-ODECK	Orange Deck for GR575 (SF03P513)	1
06	3110903112	Screw, Phillips Pan Head Self-Tapping ST3.5*16L	4
07	3110604012	Screw, Cross Recessed Pan Head M4*12L	2
08	SF03P515	Shroud, Battery Front Cover PP	1
09	SF03P517	Shroud, Battery Left-side Cover PP	1
10	3000404021	Washer, Ø4.3*Ø12*1	8
11	3110903032	Screw, Phillips Pan Head Self-Tapping ST3.5*12L	4
12	SF03P516	Shroud, Battery Right-side Cover PP	1
13	3110803021	Screw, Large Flat Head Phillips Self-Tapping ST3.5*8L	4
14	MBB-575D-CVR-BTLA	Back Cover, Black, with Tail Light Assemblies including all wiring for GR575 (SF03E506)	1
15	3110604012	Screws, Cross Recessed Pan Head M4*12L	4
16	SF06E506	Shroud, Rear Cover	1
17	3100304012	Nut, Nylon M4	6
18	SF06E116	Frame, Body Assembly	1
19	SF06P102	Bracket, Front Shroud Q235B	1
20	3100308012	Nut, Nylon M8	1
N/A	MBB-575D-CVR-RBC	Rear Battery/Controller Cover for GR575	1

Note: MBB-575D-CVR—RBC includes items 8, 9, and 12.

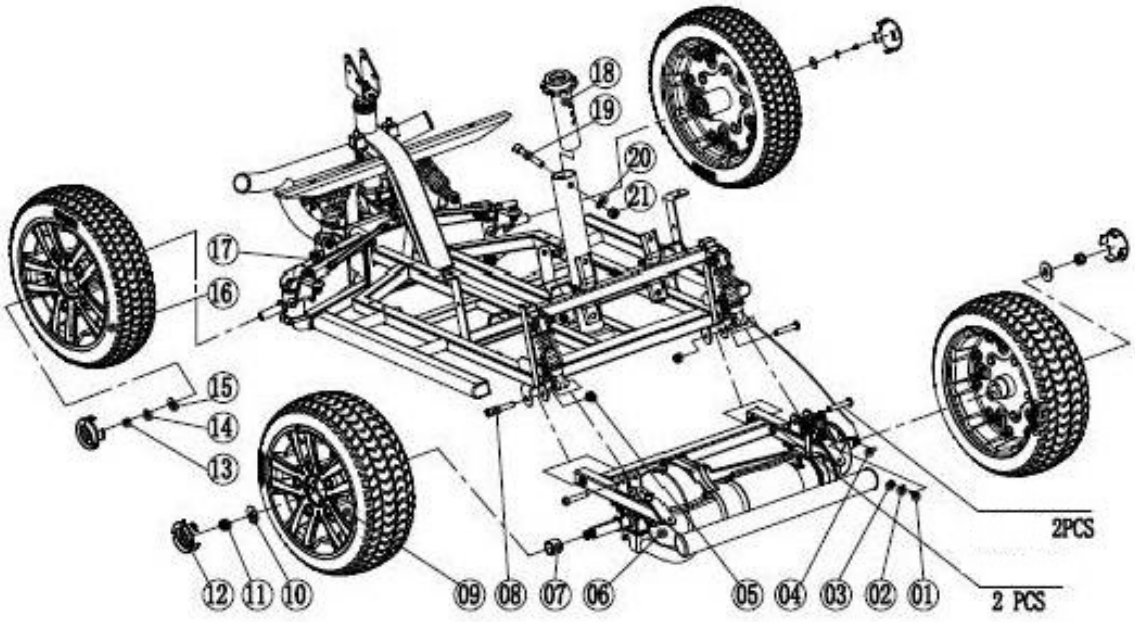

Complete Body Assembly (SF06E116)

ITEM	PART NO.	DESCRIPTION	QTY.
01	3111706111	Screw, Perforated Pan Head M6*10L	1
02	3000406081	Washer, Ø6.4*Ø12*0.8	1
03	3100106011	Nut, Hex M6	1
04	3001305020	Key, Flat 5*20	1
05	3100308012	Nut, Nylon M*	2
06	SF06E106	Frame, Rear Assembly	1
07	SF03P228	Spacer, Rear Axle Q235	1
08	SE1P227A	Screw, Large Flat Head Socket M8*47L	2
09	SF06E202	Complete Rear Wheel Assembly 13x5 for GR575	2
10	3000413052	Washer, Ø13*Ø21*1.5	2
11	31003W6012	Nut, Nylon 1/2”-20UNF	2
12	SE06P517	Cap, Wheel ABS	4
13	3110305019	Bolt, Hexagon Head M5*12L	2
14	3003105012	Washer, Spring Ø5	2
15	3000406022	Washer, Ø6*Ø19*1.5	2
16	SF06E201	Complete Front Wheel Assembly 13x4 for GR575	2
17	SF06E117	Frame, Front Assembly	1
18	SE1E402B	Post, Seat	1
19	3110310059	Screws, Hexagon Socket Head Cap M10*60L	1
20	SA2P422A	Washer, Arc Ø10/T=2	1
21	3100310012	Nut, Nylon M10	1

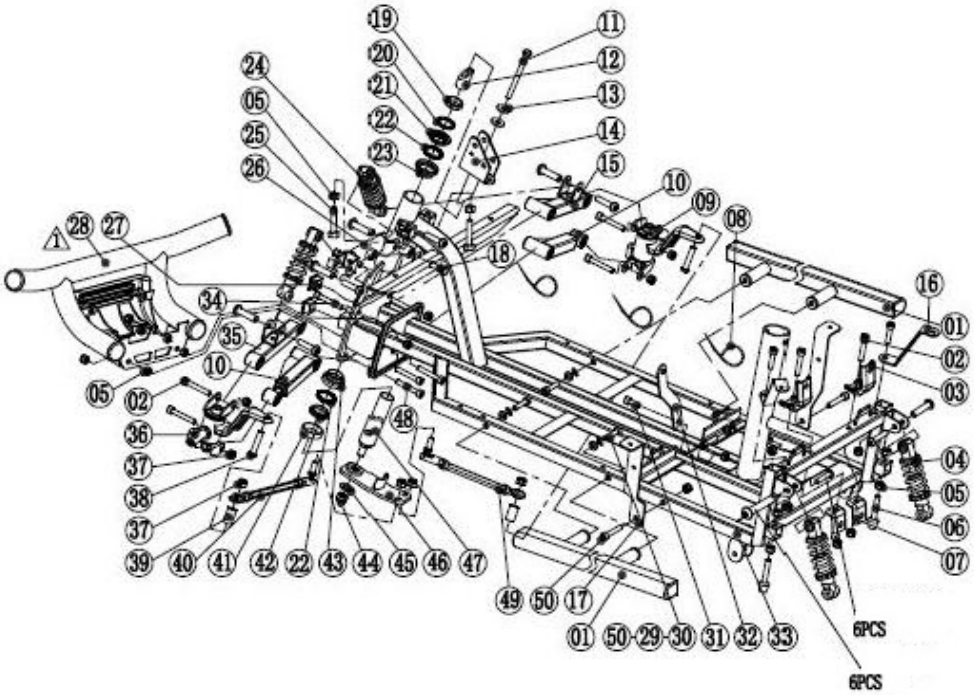

Front Frame Assembly (SF06E117)

ITEM	PART NO.	DESCRIPTION	QTY.
01	MBB-575D-SRAIL	Side Rail, Left/Right with mounting hardware for GR575	2
02	3110308049	Screw, Hexagon Socket Head Cap M8*45L	6
03	SF03P148	Bracket, Rear Top 1 Q235	2
04	MBB-575D-SHOCK-RR	Rear Shock Absorber (SF03A115)	2
05	3100108012	Nut, Hex M8	6
06	SF03A113	Buffer, Plastic Head Ø18-M8*43	2
07	SF03P149	Bracket, Rear Bottom 2 Q235	2
08	3001003010	Zip Ties, 3*150mm Black	3
09	SF03E207	Steering Arm, Right-side Assembly	1
10	SF03E208	Lower Arm Assembly	2
11	3110408012	Bolt, Hex M8*100L	1
12	SE1P213A	Slug, Yoke Mounting A3	1
13	3000408031	Washer, Ø8.4*Ø24*2	2
14	SE06A207	Tiller Yoke	1
15	SF03E209	Arm Assembly, Top Right-side	1
16	SF06P103	Bracket, Battery Cover Q235B	2
17	3100108012	Nut, Hex M8	2
18	3110410072	Bolt, Hex M10*30L	1
19	3090400010	Nut, Bearing BC1”-24	1
20	3090432020	Gasket, Bearing	1

ITEM	PART NO.	DESCRIPTION	QTY.
21	3090432030	Bracket, Upper Bearing	1
22	3090432040	Ring, Bearing	2
23	3090432050	Cup, Bearing Ø32.5	1
24	MBB-575D-SHOCK-FR	Front Shock Absorber (SF03A114)	2
25	3110408101	Bolt, Hex M8*50L	2
26	SF03A205	Suspension, Arm Set	1
27	SA2P420A	Plug, Square Tube -2 25*2.0 PP	2
28	MBB-575D-BMP-FR	Front Bumper for GR575 including hardware	1
29	3003108012	Washer, Spring Ø8	4
30	3000408012	Washer, Ø8.4*Ø16*1.6	4
31	3110308019	Screw, Hexagon Socket Head Cap M8*16L	1
32	SF03P145	Bracket, Intermediate Q235	1
33	SF06A107	Frame, Main Assembly	1
34	SF03P161	Screw, Hexagon Socket Head Cap M8*75L	2
35	SF03E210	Arm Assembly, Top Left-side	1
36	SF03E206	Steering Arm, Left-side Assembly	1
37	3100308012	Nut, Nylon M8	19
38	3110108112	Bolt, Large Flat Head Hex M8*50L	2
39	SE3P120B	Spacer, Paddle Ø8*Ø14*24 A3	2
40	SF03E205	Connecting Rod, Assembly-II	1
41	WC5P210A	Bushing, Beam Tube A3	1
42	3090432070	Bracket, Lower Bearing Ø37	1
43	3090432060	Bearing, Lower Bowl Ø32.5	1
44	3100312021	Nut, Nylon M12*1.25	1
45	3000412011	Washer Ø1.25*Ø23*2.5	1
46	SF03A204	Steering Rod, Assembly	1
47	SF03A203	Steering Tube, Assembly	1
48	3110308029	Screw, Hexagon Socket Head Cap M8*85L	2
49	SF03E204	Connecting Rod, Assembly-I	1
50	3110308139	Screw, Hexagon Socket Head Cap M8*40L	8
51	SF03P146	In the case of fixed film Q235	2

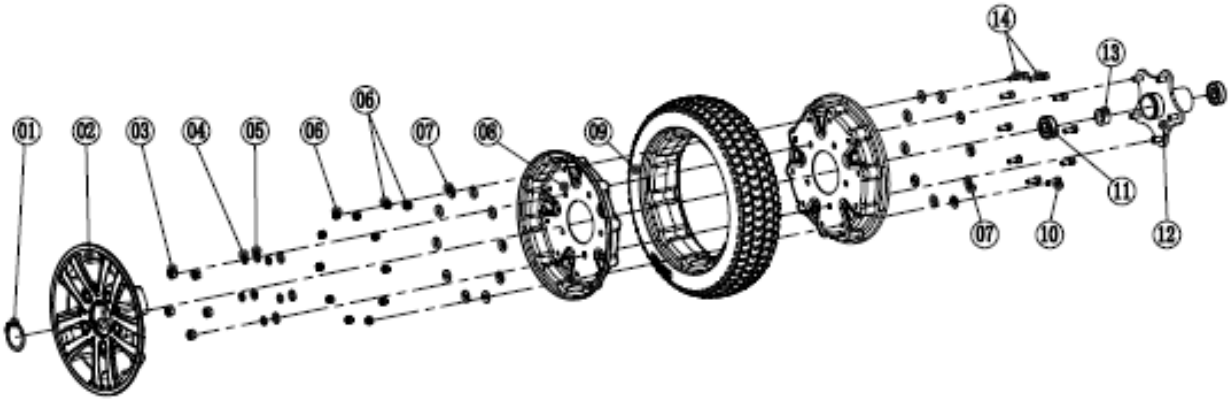

Complete Front Wheel Assembly 13x4 for GR575 (SF06E201)

ITEM	PART NO.	DESCRIPTION	QTY.
01	3001438012	Snap Ring, C-shaped (outer) Ø38	1
02	SF06E511	13” Wheel Cover	1
03	3111W3011	Nut, Hex 5/16”-24UNF	5
04	3003108011	Washer, Spring Ø8	5
05	3000408011	Washer, Ø8.4*Ø16*1.6	5
06	3100306012	Nut, Nylon M6	12
07	3000406012	Washer, Ø6*Ø12*1.6	20
08	SF03P230	Rim, 13” Front Wheel Q235B	2
09	SF06P528	Tire, 13” Front PU	1
10	3110306089	Screw, Hexagon Socket Head Cap M6*16L	8
11	3090162020	Bearing, 6202-2Z	2
12	SF03A212	Hub, Front Wheel Assembly	1
13	SF03P229	Spacer, Bearing Q235B	1
14	3110306049	Screw, Hexagon Socket Head Cap M6*20L	2

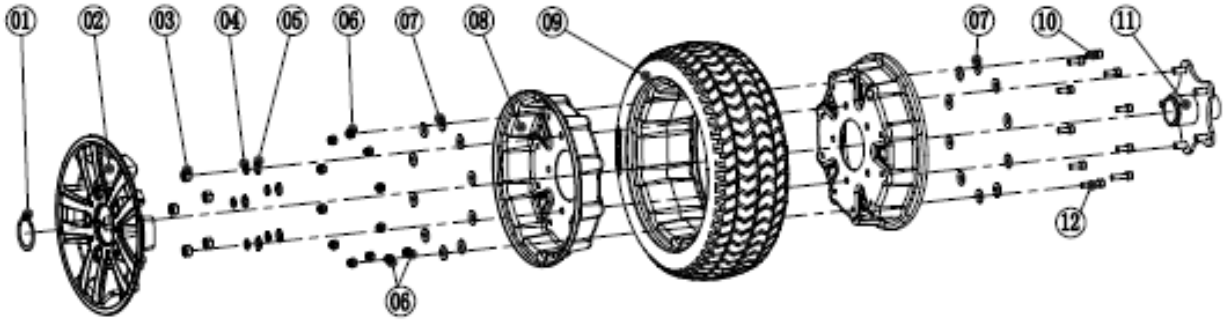

Complete Rear Wheel Assembly 13x5 for GR575 (SF06E202)

ITEM	PART NO.	DESCRIPTION	QTY.
01	3001438012	Snap Ring, C-shaped (outer) Ø38	1
02	SF06E511	13” Wheel Cover	1
03	3111W3011	Nut, Hex 5/16”-24UNF	5
04	3003108011	Washer, Spring Ø8	5
05	3000408011	Washer, Ø8.4*Ø16*1.6	5
06	3100306012	Nut, Nylon M6	12
07	3000406012	Washer, Ø6*Ø12*1.6	20
08	SF03P231	Rim, 13” Wheel Q235B	2
09	SF06P529	Tire, 13” Rear PU	1
10	3110306089	Screws, Hexagon Socket Head Cap M6*16L	8
11	3090162020	Bearing, 6202-2Z	2
12	SF03A212	Hub, Front Wheel Assembly	1
13	SF03P229	Spacer, Bearing Q235B	1
14	3110306049	Screw, Hexagon Socket Head Cap M6*20L	2

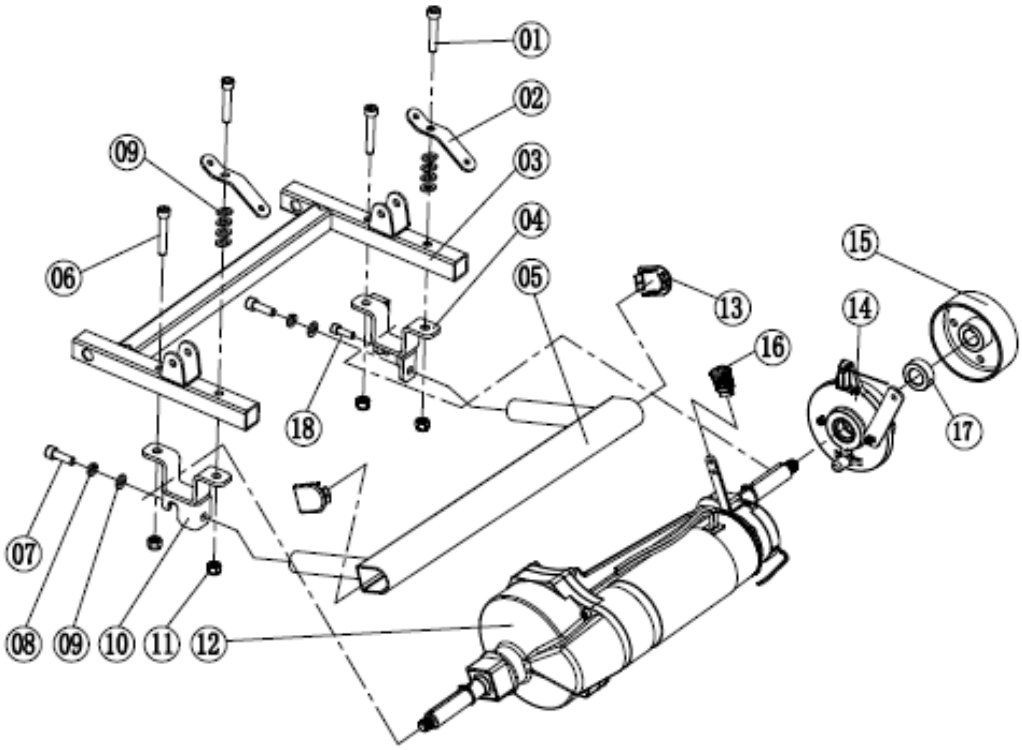

Rear Frame Assembly (SF06E106)

ITEM	PART NO.	DESCRIPTION	QTY.
01	3110308159	Bolt, Hexagon Head M8*55L	2
02	SF03P150	Bracket, Transaxle Top-side Q235	2
03	SF03A104	Frame, Rear Assembly	1
04	SF03A109	Bracket, Transaxle Bottom Right-side	1
05	MBB-575D-BMP-RR	Rear Bumper with mounting hardware for GR575 (SF06A105)	1
06	3110308049	Bolt, Hexagon Head M8*45L	2
07	3110308089	Screw, Hexagon Socket Head Cap M8*25L	2
08	3003108012	Washer, Spring Ø8	2
09	3000408012	Washer, Ø8.4*Ø16*1.6	10
10	SF03A108	Bracket, Transaxle Bottom Left-side	1
11	3100308012	Nut, Nylon M8	5
12	RA07E101	Transaxle Assembly	1
13	SF06P519	Plug, D-type Pipe PP	2
14	3051400010	Brake, 71001	1
15	SF03A217	Brake, Drum Q235B	1
16	WE03P510	Handle, PP	1
17	SF03P249	Spacer, Bearing Q235B	1
18	3110306079	Screw, Hexagon Socket Head Cap M6*14L	1
N/A	MBD-575D-BRAKE	Transaxle Motor Brake Assembly for GR575 (RA07E101)	1

Note: MBD-575D-BRAKE assembly includes items 12, 14, 15, 16, and 17.

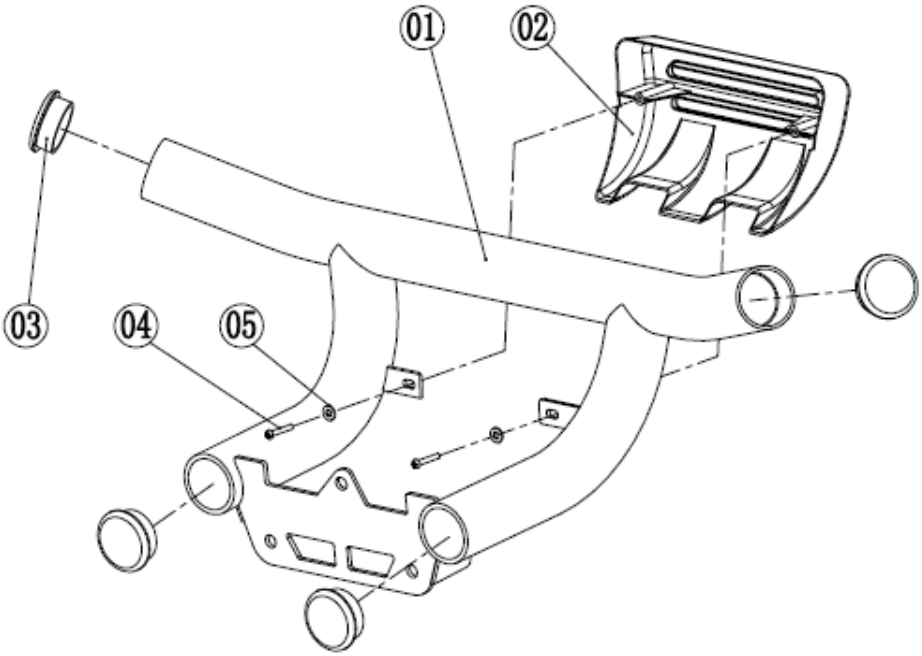

Front Bumper for GR575 including hardware (MBB-575D-BMP-FR) (SF06E107)

ITEM	PART NO.	DESCRIPTION	QTY.
01	SF06A106	Bumper, Front Assembly	1
02	SF06P518	Grill, Front Lower PP	1
03	WE03P512	Plug, Ø38 Pipe PP	4
04	3110903071	Screw, Phillips Pan Head Self-Tapping ST3.5*14L	2
05	3000404031	Washer, Ø4*Ø8*0.8	2

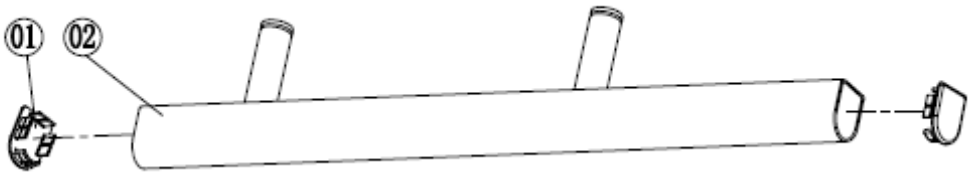

Side Rail, Left/Right with mounting hardware for GR575 (MBB-575d-SRAIL) (SF06E108)

ITEM	PART NO.	DESCRIPTION	QTY.
01	SF06P519	Plug, D-type pipe PP	2
02	SF06A102	Rail, Side Tube Assembly	1

Note: Hardware not shown.

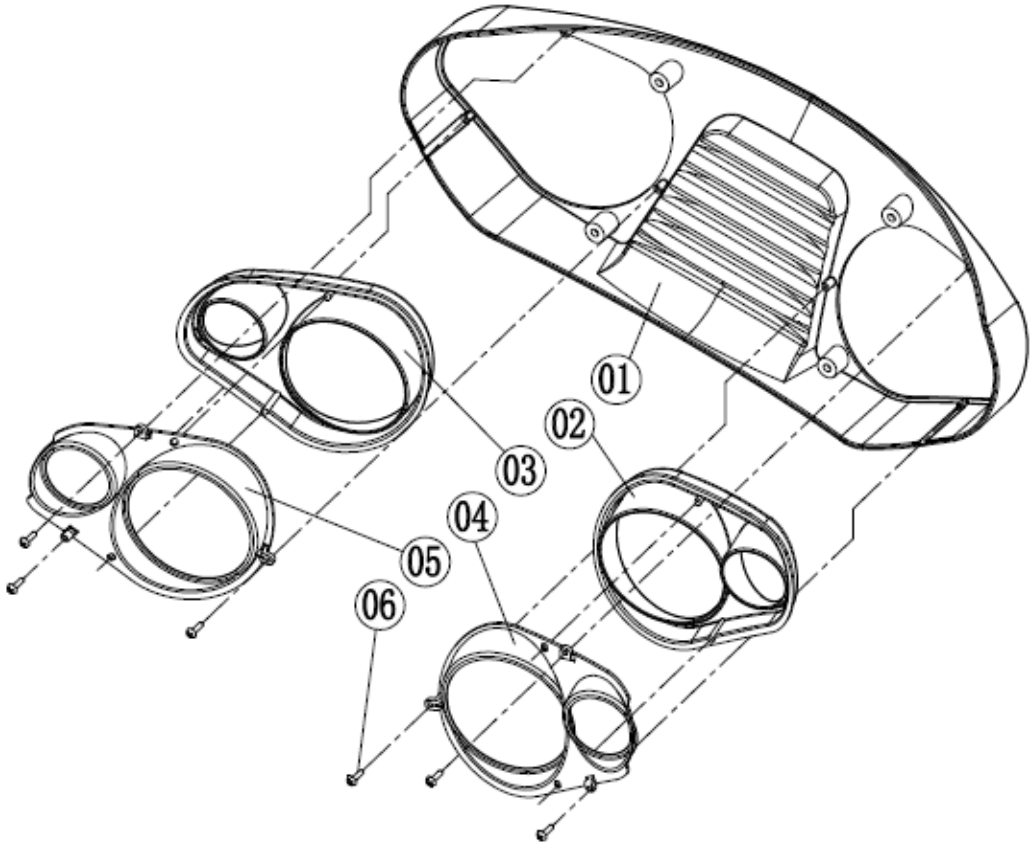

Rear Light Cover Assembly（SF06E501）

ITEM	PART NO.	DESCRIPTION	QTY.
01	SF06P502	Cover, Taillights PP	1
02	SF06P504	Shade, Rear Left-side PMMA	1
03	SF06P503	Shade, Rear Right-side PMMA	1
04	SF06P523	Light, Reflective Rear Left-side Housing ABS	1
05	SF06P522	Light, Reflective Rear Right-side Housing ABS	1
06	3110902011	Screw, Phillips Pan Head Self-Tapping ST2.6*10L	6

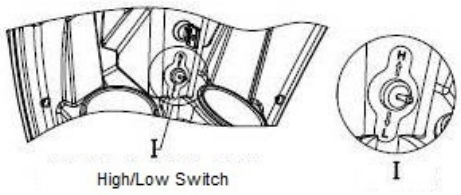

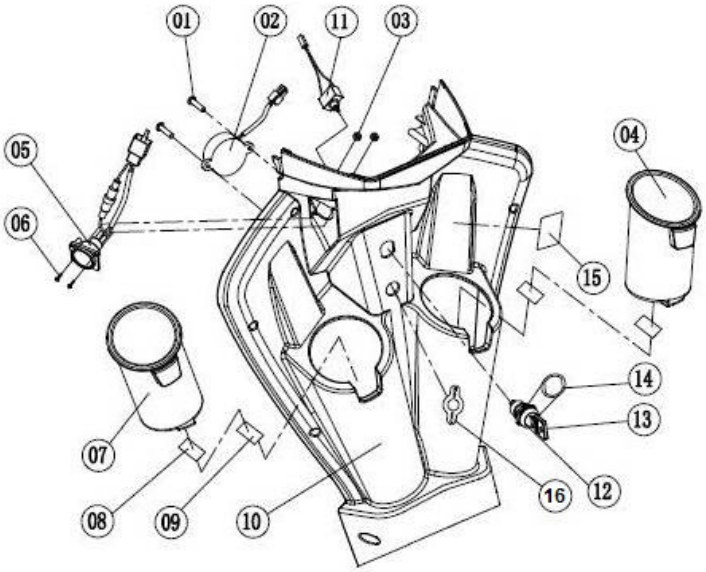

Rear Tiller Cover Complete with cup holders and horn for GR575 (MBB-575D-RTC) (SF06E502)

ITEM	PART NO.	DESCRIPTION	QTY.
01	3110903111	Screw, Phillips Pan Head Self-Tapping	2
02	SF03A605	Horn Assembly	1
03	3100103012	Nut, Hex M3	2
04	SF03P505	Bottle Holder, Right-side Removable PP	1
05	SF03A618	Receptacle, Charger Cord Port	1
06	3111003012	Screw, Phillips Head M3*12L	2
07	SF03P504	Bottle Holder, Left-side Removable PP	1
08	3000325160	Velcro, Hook 25*40	2
09	3000325170	Velcro, Loop 25*40	2
10	SF06P521	Tiller, Rear-side Cover PP	1
11	SF03A604	Switch, High/low Speed 15A250V	1
12	SF03A611	Switch, Key	1
13	SF06A621	Key, 44*23.5*1.8	1
14	SE06P539	Washer, Key (20*26)mm*1mm	1
15	SB3P535A	Label, Hot Liquids Instruction	1
16	SF03P557	Labels, High/Low Speed Indication PVC	1

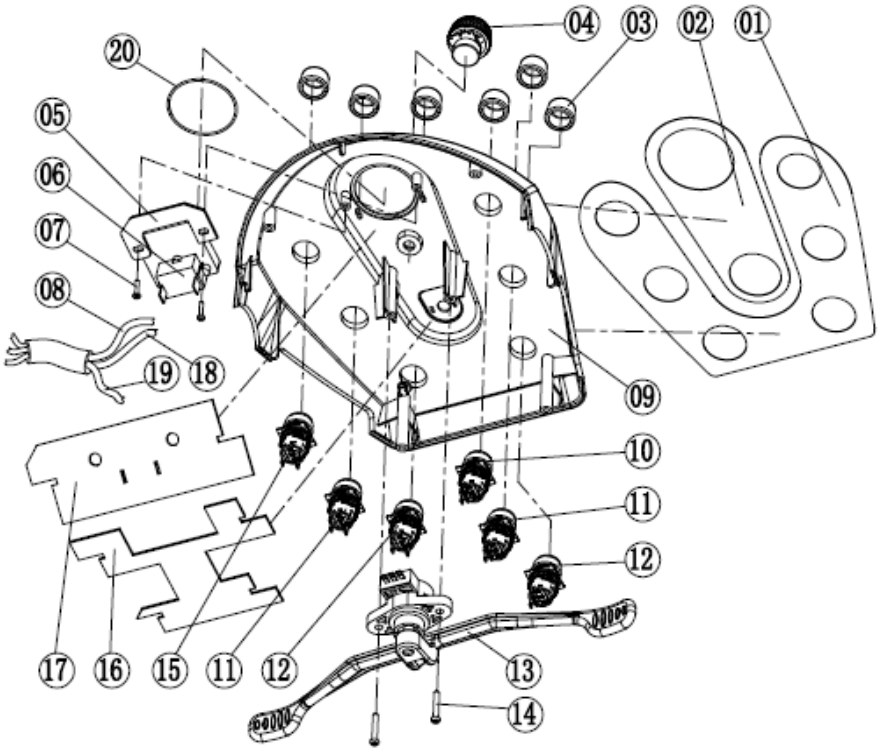

Complete Dash for GR575 (MBB-575D-DASH)（SF06E503）

ITEM	PART NO.	DESCRIPTION	QTY.
01	SF06P540	Label, Operation 1 PVC	1
02	SF06P541	Label, Operation 2 PVC	1
03	SF06P520	Cap, Waterproof Plastic Switch Cover	6
04	SE06P511	Knob, Speed Control PCABS	1
05	SB3P608A	Bracket, Battery Gauge	1
06	3050400040	Gauge, Battery (Round) CK-36	1
07	3110704021	Screw, Large Flat Head Phillips M4*6L	2
08	SF03A626	Cable, Upper and Lower Panel Adapter	1
09	SF06P512	Console, Top-side Cover ABS	1
10	3053100140	Button, Headlight 5A/250VAC No Lock	1
11	3053100130	Button, Turn Signal 5A/250VAC No Lock	2
12	3053100120	Button, Horn	2
13	SF03E601	Paddle, TOCOS 5KVR Assembly	1
14	3110903042	Screw, Phillips Pan Head Self-Tapping ST3.5*20L	2
15	3053100110	Button, Emergency Flashers 5A/250VAC No lock	1
16	SF03P535	PCB board 2	1
17	SF06P601	PCB board 1	1
18	SF03A624	Cable, 100KVR Speed Adjust	1
19	SF03A625	Cable, LED Light Switch	1
20	3080135010	Gasket, O-ring NR Ø35*Ø2	1

Note: Items 1-20 not sold separately.

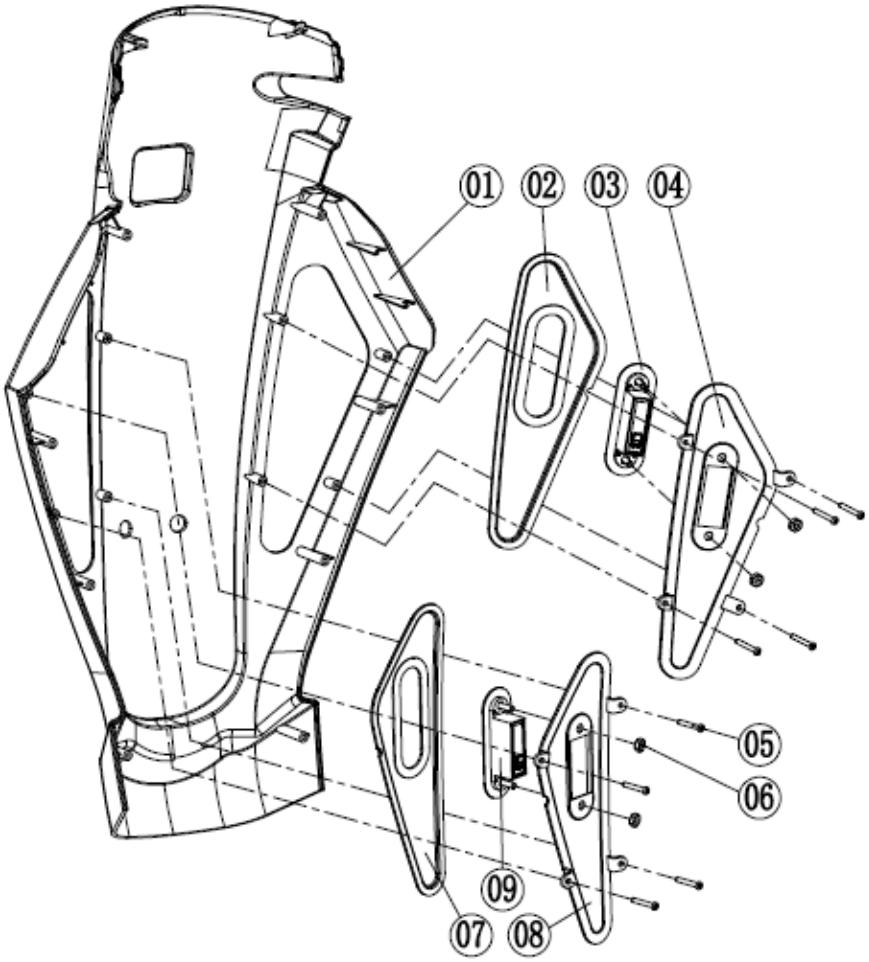

Front Tiller Cover complete with lights and decal for GR575 (MBB-575D-FTC) (SF06E504）

ITEM	PART NO.	DESCRIPTION	QTY.
01	SF06P513	Shroud, Front Tiller Cover ABS	1
02	SF06P514	Lens, Front right-side Turn Signal PMMA	1
03	SF03A613	Turn Signal, Front (Right)	1
04	SF06P516	Shade, Front Right-side Turn Signal ABS	1
05	3110903031	Screw, Phillips Pan Head Self-Tapping ST3.5*12L	8
06	3100304012	Nut, Nylon M4	4
07	SF06P515	Lens, Front Left-side Turn Signal PMMA	1
08	SF06P517	Shade, Front Left-side Turn Signal ABS	1
09	SF03A606	Turn Signal, Front (Left)	1

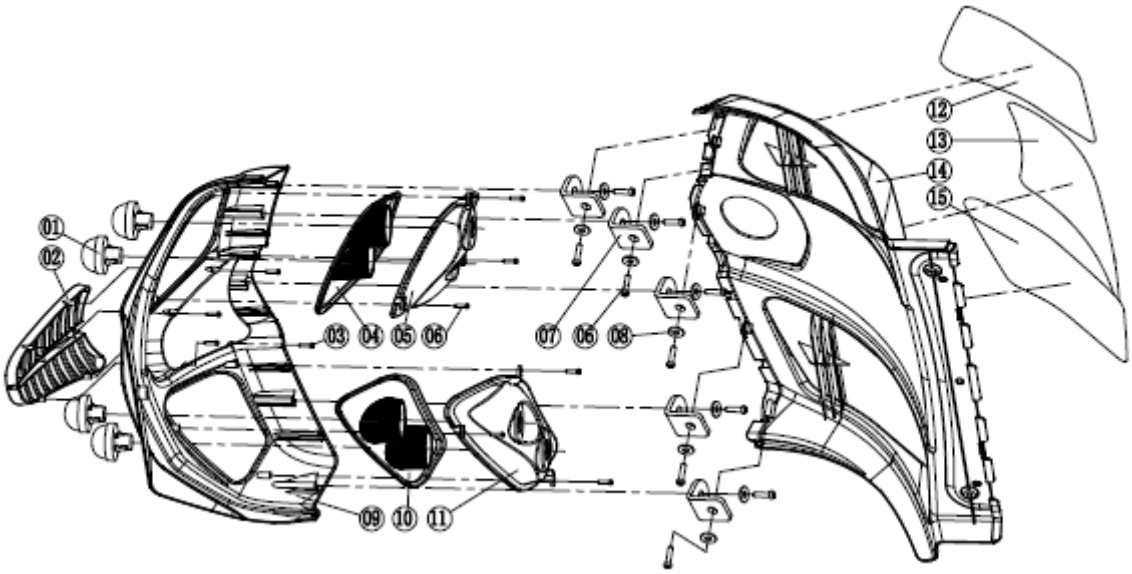

Front Shroud Assembly（SF06E505）

ITEM	PART NO.	DESCRIPTION	QTY.
01	SF03A603	Headlight Assembly W5W-24VDC	4
02	SF06P507	Grill, Front Cover ABS	1
03	3110902031	Screw, Phillips Pan Head Self-Tapping ST2.9*10L	4
04	SF06P509	Cover, Right-side Front Head Light PMMA	1
05	SF06P511	Holder, Front Right-side ABS	1
06	3110903031	Screw, Phillips Pan Head Self-Tapping ST3.5*12L	16
07	SF03P123	Bracket, Front Shroud	5
08	3000404012	Washer, Ø4*Ø9*0.8	10
09	SF06P506	Shroud, Front PP	1
10	SF06P508	Cover, Left-side Front Head Light PMMA	1
11	SF06P510	Holder, Front Left-side ABS	1
12	SF03P537	Label, Non-slip Right-side PVC	1
13	SF03P538	Label, Non-slip Center PVC	1
14	MBB-575D-SHRD-FOS	Front Shroud, Red for GR575 with Scuff Guards (SF03P512)	1
14	MBB-575D-SHRD-FRS	Front Shroud, Orange for GR575 with Scuff Guards (SF03P512)	1
15	SF03P539	Label, Non-slip Left-side PVC	1
N/A	MBB-575D-SGS	Scuff guard set – 3 pieces for GR575	3
N/A	MBB-575D-SHRD-FRG	Front Shroud Black with Red Grill, headlights and harness for GR575	1
N/A	MBB-575D-SHRD-FOG	Front Shroud Black with Orange Grill, headlights and harness for GR575	1

Note: MBB-575D-SGS includes items 12, 13, and 15.
Note: MBB-575D-SHRD-FRG and MBB-575D-SHRD-FOG includes items 1-6, and 9-11.

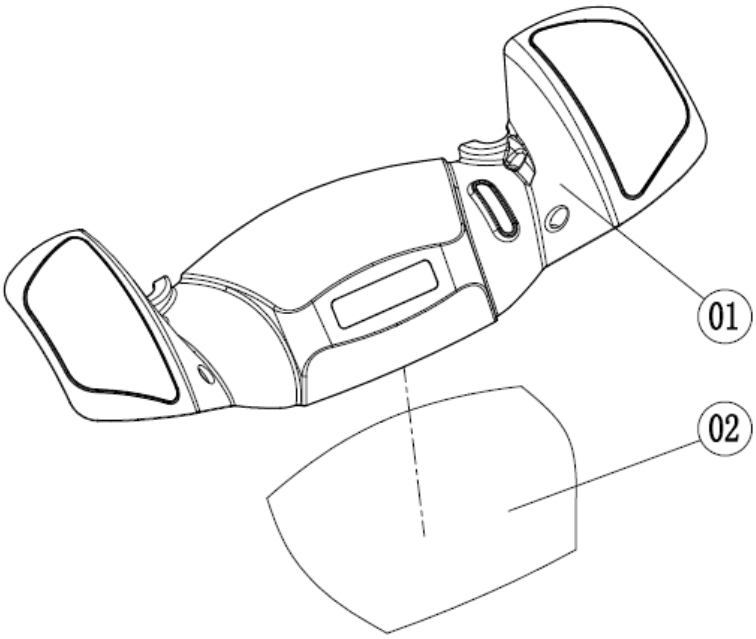

Rear Shroud Cover - RED (MBB-575D-CVR-RSR) (SF06E506)
Rear Shroud Cover - ORANGE (MBB-575D-CVR-RSO) (SF06E506)

ITEM	PART NO.	DESCRIPTION	QTY.
01	SF06P501	Shroud, Rear ABS	1
02	SF03P358	Barrier, Motor Noise (Cotton)	1

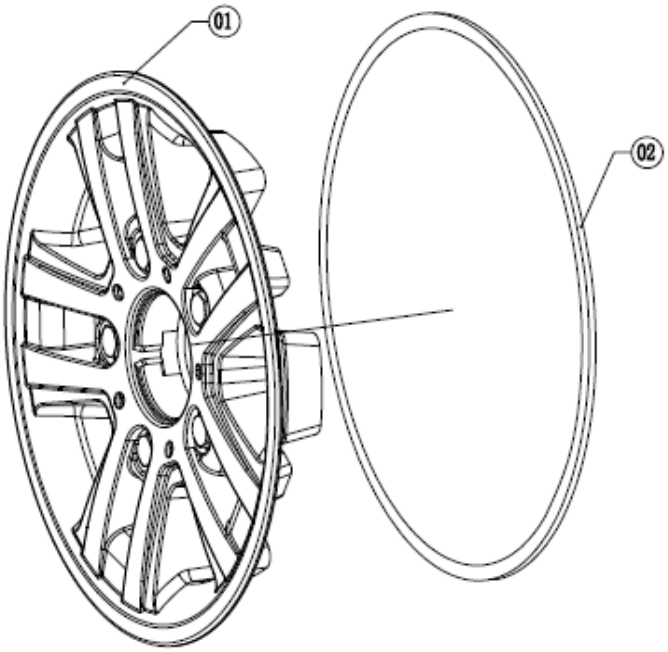

13" Wheel Cover Assembly（SF06E511)

ITEM	PART NO.	DESCRIPTION	QTY.
01	SF03P524	Cover, 13" Wheel ABS	1
02	300360602B	Pad, EVA 6*2.5*750L	1

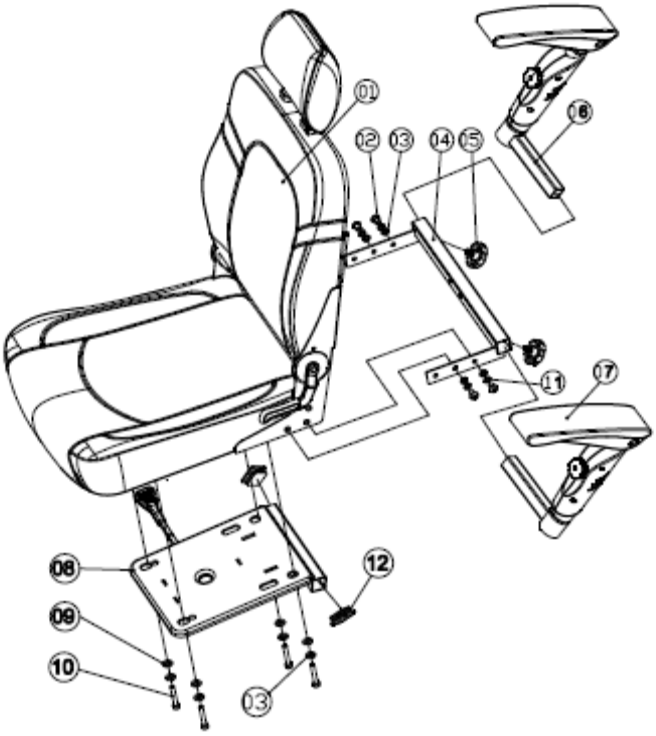

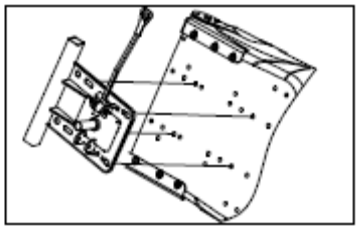

Seat Assembly（SF06E401)

ITEM	PART NO.	DESCRIPTION	QTY.
01	WS36E104	20" x 20" x 21" Seat (Adjustable Depth)	1
02	3110108122	Screw, Large Flat Head Socket M8*16L	4
03	3000408031	Washer, Ø8.4*Ø16*1.5	4
04	WS36A103	Receiver, 20" Arm Tube	1
05	WE03A502	Screw, Thumb Wheel 15 M8*15	2
06	WC9E403C	Armrest, Left-side Assembly	1
07	SF03E402	Armrest, Right-side Assembly	1
08	WE03E406	Swivel, Seat Assembly	1
09	3000408032	Washer, Ø8.4*Ø24*2	4
10	3110408092	Bolt, Hex M8*35L	4
11	3003108012	Washer, Spring Ø8	8
12	SA2P420A	Plug, Square Tube 25*2	2
N/A	WD6A402A	Receiver, Accessory Tube	1
N/A	WC9P453A	Plug, Square Pipe 32*32*2.5	1
N/A	3110108042	Screw, Large Flat Head Socket M8*45L	2
N/A	3100308012	Nut, Nylon M8	2
N/A	SE1P529A	Label, Accessory Receiver 62*25 PVC	1
N/A	WE03A503	Screw, Accessory Thumb Wheel 45 M8*45L	1

N/A – Not shown in the illustration.

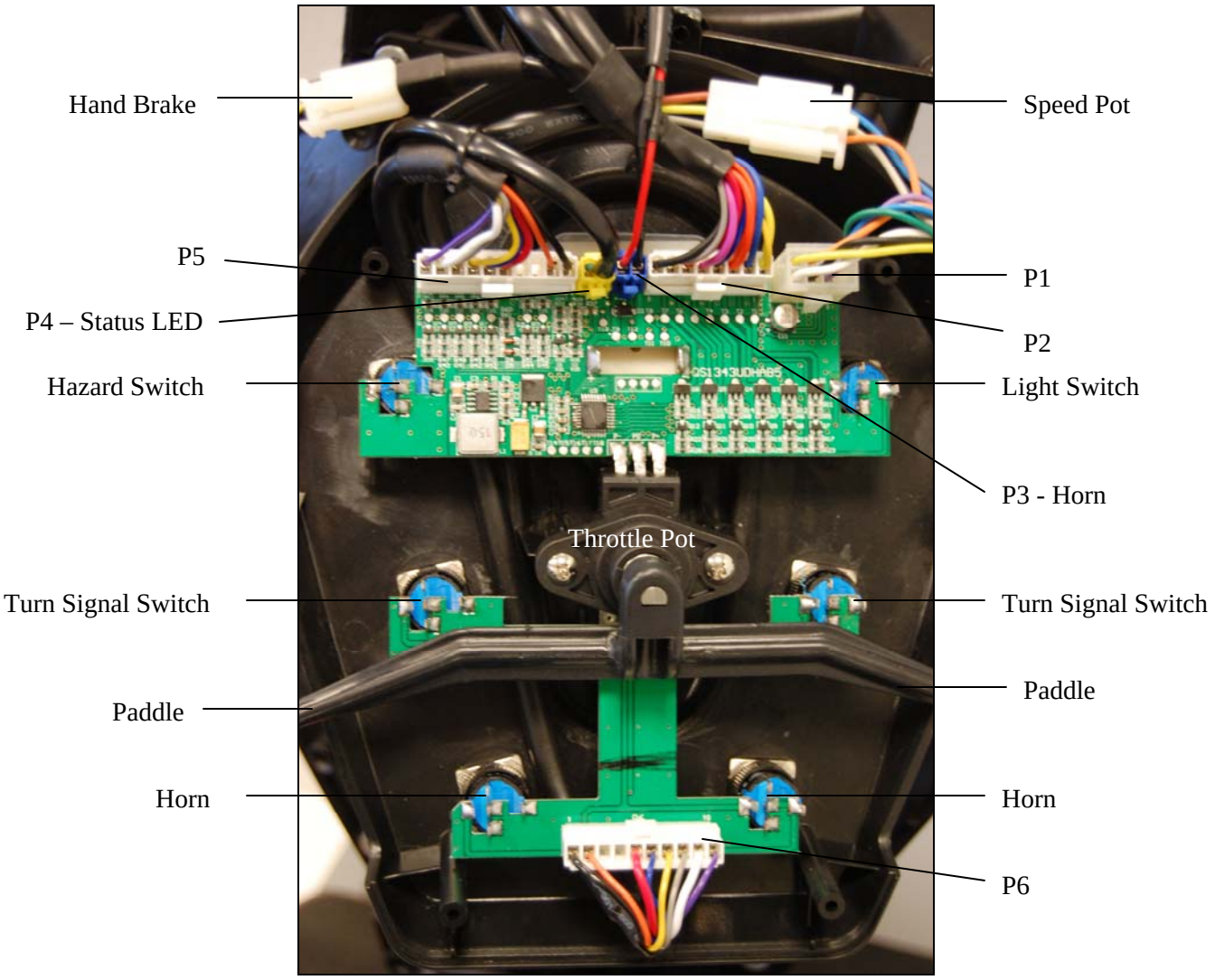

Dashboard (Underside) Note: P5 and P6 are internal connections only.

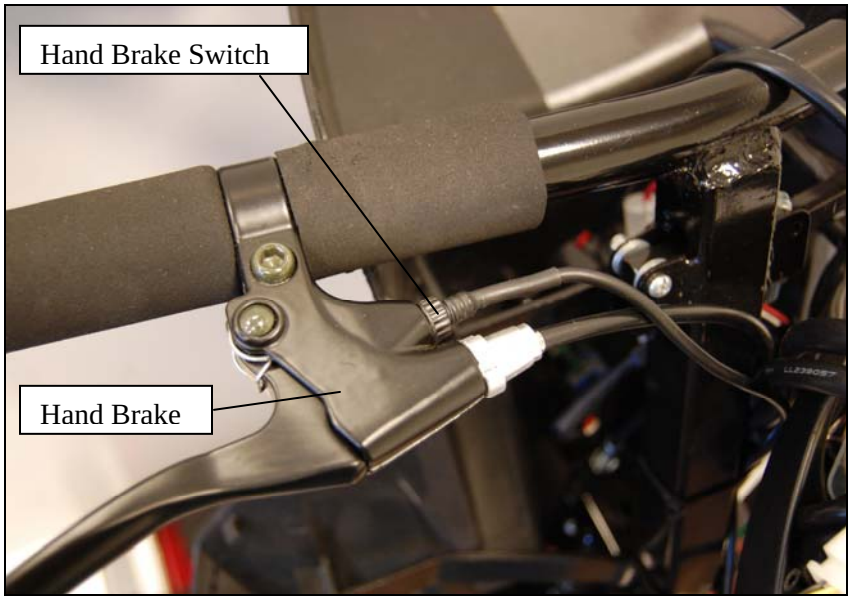

Handbrake

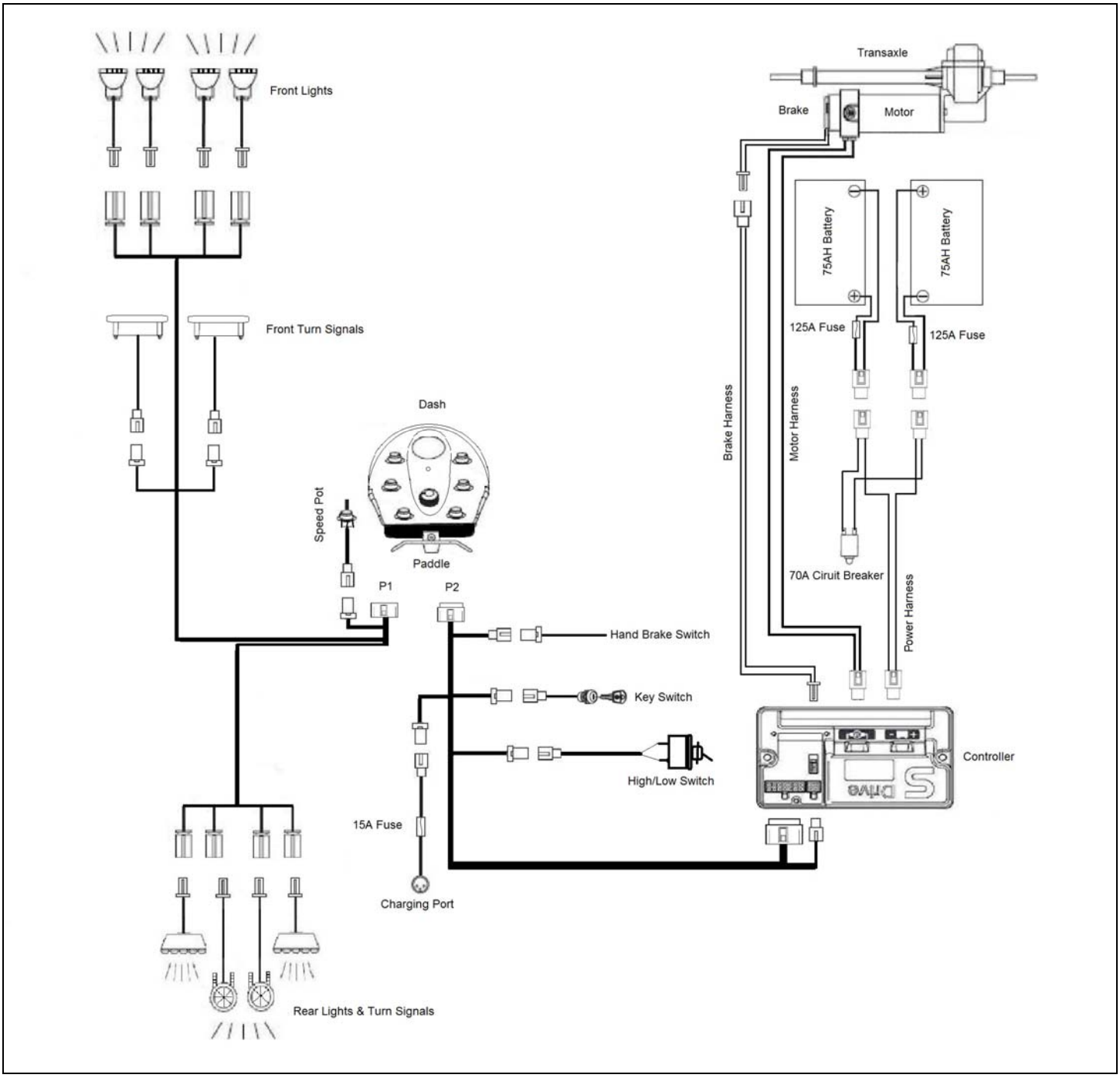

Wiring Diagram

GOLDEN
technologies

Golden Technologies
401 Bridge Street
Old Forge, PA 18518
www.goldentech.com

PATRIOT_SG_REVA_050714